2003

MITSUBISHI ELECTRIC

Service Manual

PROJECTION TELEVISION

V23 / V23+ / V23++ / V23+++ CHASSIS

WS-48613

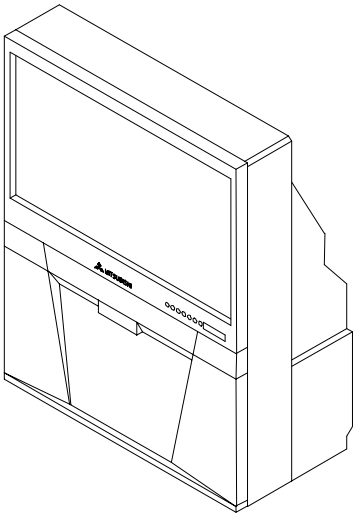

V23 MODELS
WS-48513
WS-55513
WS-65513
WS-73513

V23+ MODELS
WS-48613
WS-55613
WS-65613

V23++ MODELS
WS-65713
WS-73713

V23+++ MODELS
WS-55813
WS-65813

CAUTION:
Before servicing this chassis, it is important that the service person read the "SAFETY PRECAUTIONS" and "PRODUCT SAFETY NOTICE" contained in this manual.

SPECIFICATIONS

- **Power Input** : AC 120V, 60Hz
- **Power Usage** : 275W
  300W [WS-65813/ WS-73513/ WS-73713 only]
- **Frequency Range** : VHF 54 ~ 470MHz
  UHF 470 ~ 806MHz
- **Antenna Input** : VHF/UHF 75Ω unbalanced
  2 - NTSC
  1 - ATV/QAM
- **CRT Size** : [7 inches]
  : [9 inches] WS-65813/ WS-73513/ WS-73713 only
- **High Voltage** : 32.0kV (at 0A)
- **Cabinet Weight and Dimensions (Refer to page 5)**
- **Speakers (8 Ohms 10W)**
  : 2-5" full range [WS-48513 / WS-48613]
  : 2-6" full range [WS-55513 / WS-65513 / WS-73513]
  : 2-6" coaxials [WS-55613 / WS-65613]
  : 2-6" woofers/ 2-1.5" tweeters [WS-65713 / WS-73713]
  : 2-5"x7" coaxial [WS-55813 / WS-65813]

- **Input Level** : VIDEO IN JACK (RCA Type)
  1.0Vp-p 75Ω unbalanced
  : AUDIO IN JACK (RCA Type)
  -4.7dBm 43kΩ unbalanced
  : S-VIDEO IN JACK
  (Y/C separate type)
  Y:1.0 Vp-p C:0.286Vp-p(BURST)
  75Ω unbalanced
  : COMP / Y, Cr, Cb (RCA Type)
  Y: 1.0 Vp-p Cr, Cb: 700mVp-p
  : ATV / Y(G), Pr(R), Pb(B), H, V
  Y: 1.0Vp-p with sync 75Ω (BNC)
  Pr, Pb: 700mV 75Ω
  H, V: 3.0Vp-p 75Ω
  : VGA / R,G,B,V,H (15 pin D)
- **Output Level** : VIDEO OUT JACK (RCA Type)
  1.0Vp-p 75Ω unbalanced
  : AUDIO OUT JACK (RCA Type)
  -4.7dBm 4.7kΩ unbalanced
- **Digital Interface** : IEEE-1394 I/O Jacks
  : AC-3 Digtal Audio Output
  : MonitorLink™/DVI
  : MonitorLink™ Control/RS-232C
  : 4 Memory Card Reader Inputs

.

- Design specifications are subject to change without notice.

MITSUBISHI DIGITAL ELECTRONICS AMERICA, INC.
9351 Jeronimo Road, Irvine, CA 92618-1904
Copyright © 2003 Mitsubishi Digital Electronics America, Inc.
All Rights Reserved

CONTENTS

INTRODUCTION **5**

CABINET WEIGHT & DIMENSIONS **5**

PRODUCT SAFETY NOTICE **5**

DISASSEMBLY PROCEDURES **7**
WS-48513 / WS-48613
Front Cabinet Components 7
Rear Cabinet Components 8
WS-55513 / WS-55613 / WS-65513 / WS-65613
Front Cabinet Components 9
Rear Cabinet Components 10
WS-55813
Front Cabinet Components 11
Rear Cabinet Components 12
WS-65813
Front Cabinet Components 13
Rear Cabinet Components 14
WS-73513
Front Cabinet Components 15
WS-65713 / WS-73713
Front Cabinet Components 16
WS-65713 / WS-73513 / WS-73713
Rear Cabinet Components 17

SERVICING THE LENTICULAR LENS AND FRESNEL SCREEN **18**
Removal of the Lenticular Screen and Fresnel Lens
WS-48513 / WS-48613 18
WS-55513 / WS-55613 / WS-65513 / WS-65613 19
WS-55813 / WS-65813 20
WS-65713 / WS-73713 21
WS-73513 22
All Models
Installation of the Lenticular Screen and Fresnel Lens 23

DIAMONDSHIELD™ Removal and Installation **24**

CABINET SEPARATION PROCEDURES
WS-65813 25
WS-65513 / WS-65613 and WS-65713 / WS-73513 26

SERVICING PCBs **27**
Chassis Removal 27
PCB Locations 27
Major Parts Locations 28
DM Module Replacement 28

CRT REPLACEMENT **29**
CRT Removal 29
CRT Installation 28

ELECTRICAL ADJUSTMENTS **32**
Equipment and Initial Setup 32

LED Indicator Diagnostics 34
Remote Control Operational Mode 34
Circuit Adjustment Mode 35
Service Mode Reset 36
Convergence Adjustment Mode 36
Adjustment Items List 38
Adjustment Procedures 41
Test Point Locations 41
Main / Sub Y Level & & HV Regulation 42
Main / Sub Color Level & CRT Cutoff 43
White Balance (NTSC) & White Balance (HD) 44
Black Level & Sub Contrast 45
Dynamic Focus Presets & Lens Focus 46
Alignment Magnet / Electrostatic Focus & Charactrer Position 47
Geometry Presets 48
Deflection Geometry Adjustments 49
Convergence Geometry Adjustments 50
Centering & Static Convergence 51
Coarse Convergence Adjustments 52
Fine Convergence Adjustments 52

CHIP PARTS REPLACEMENT 54

REPLACEMENT PARTS 55
Parts Ordering 55
Critical and Warranty Parts Designation 55
Parts Tolerance Codes 55
Quick Reference List 56

SERVICE PARTS LIST 57
SCREEN ASSEMBLY PARTS LIST 73
CIRCUITRY BLOCK DIAGRAMS 77

INTRODUCTION

This service manual provides service instructions for the V23, V23+, v23++ and V23+++ PTV chassis types. The specific models for each chassis type are listed below. Service personnel should read this manual thoroughly before servicing these chassis.

V23 Chassis	V23+ Chassis	V23++ Chassis	V23+++ Chassis
WS-48513	**WS-48613**	**WS-65713**	**WS-55813**
WS-55513	**WS-55613**	**WS-73713**	**WS-65813**
WS-65513	**WS-65613**		
WS-73513			

This service manual includes:

1. Assembly and disassembly instructions for the front and rear cabinet components.
2. Servicing of the Lenticular Screen and Fresnel Lens.
3. Servicing printed circuit boards (PCBs).
4. CRT replacement procedure.
5. Electrical adjustments.
6. Chip parts replacement procedures.
7. Circuit path diagrams.

The parts list section of this service manual includes:

1. Cabinet and screen parts.
2. Electrical parts.

Schematic and block diagrams of the above listed models are included in this service manual for better understanding of the circuitry. PCB drawings are also included for easy location of parts and test points.

Cabinet Weight and Dimensions

Model	Weight	Height	Width	Depth	Spkrs
WS-48513	175 lbs	49 in	44.5 in.	24 in.	5" 10W
WS-48613	180.5 lbs	49 in	45 in	24.1 in	5" 10W
WS-55513	230 lbs	50.3 in	50.5 in	25.4 in	6" 10W
WS-55613	250 lbs	50.5 in	50.5 in	28 in	6" 10W
WS-55813	200 lbs	50.5 in	50.5 in	28 in	5"&7"
WS-65513	333 lbs	62 in	59 in	28 in	6" 10W
WS-65613	333 lbs	62 in	59 in	28 in	6" 10W
WS-65713	350 lbs	61.5 in	58 in	28.5 in	6"&1.5"
WS-65813	251 lbs	62 in	59 in	28 in	6" 10W
WS-73513	374 lbs	66 in	66 in	30 in	6" 10W
WS-73713	410 lbs	66 in	65 in	30 in	6"&1.5"

• Weight and Dimensions ar approximate

PRODUCT SAFETY NOTICE

Many electrical and mechanical parts in television receivers have special safety related characteristics. These characteristics are often not evident from visual inspection nor can the protection afforded by them necessarily be obtained by using replacement components rated for higher voltage, wattage, etc.

Replacement parts which have special safety characteristics are identified in this service manual.

Electrical components having such features are identified in the parts data base and by **bold type** in the parts list of this service manual. **The replacement for any safety part should be identical in value and characteristics.**

SAFETY PRECAUTIONS

NOTICE: Observe all cautions and safety related notes located inside the receiver cabinet and on the receiver chassis.

WARNING:

1. Operation of this receiver outside the cabinet or with the cover removed presents a shock hazard from the receiver's power supplies. Work on the receiver should not be attempted by anyone who is not thoroughly familiar with the precautions necessary when working on high voltage equipment.
2. Do not install, remove or handle the picture tubes in any manner unless shatterproof goggles are worn. People not so equipped should be kept away while the picture tube is being handled. Keep the picture tube away from the body while handling.
3. When service is required, observe the original lead dress. Extra precaution should be taken to assure correct lead dress in the high voltage area. Where a short-circuit has occurred, replace those components that indicate evidence of overheating.

X-Radiation warning

The surface of the cathode ray tubes (CRTs) may generate X-Radiation, so take proper precautions when servicing. It is recommended that a lead apron be used for shielding while handling the CRT. Use this method if possible.

When replacing the CRTs, use only the designated replacement part since it is a critical component with regard to X-Radiation. High voltage must be set as prescribed under the section titled Electrical Adjustments.

Leakage current check

Before returning the receiver to the customer, it is recommended that leakage current be measured according to the following methods.

1. *Cold Check*

   With the alternating current (AC) plug removed from the AC source, place a jumper across the two AC plug prongs. Connect one lead of an ohm meter to the AC plug and touch the other lead to each exposed metal part (i.e. antennas, handle bracket, metal cabinet, screw heads, metal overlay, control shafts, etc.), particularly any exposed metal part that has a return path to the chassis. The resistance of the exposed metal parts having a return path to the chassis **should be a minimum of 1Mega Ohm**. Any resistance below this value indicates an abnormal condition and requires corrective action.

2. *Hot Check ...Use the circuit shown below to perform the hot check test.*

   1. Keep switch S1 open and connect the receiver to the measuring circuit. Immediately after connection, and with the switching devices of the receiver in their operating positions, measure the leakage current for both positions of switch S2.
   2. Close switch S1, energizing the receiver. Immediately after closing switch S1, and with the switching devices of the receiver in their operating positions, measure the leakage current for both positions of switch S2. Repeat the current measurements of items 1 and 2 after the receiver has reached thermal stabilization. **The leakage current must not exceed 0.5 milliampere (mA).**

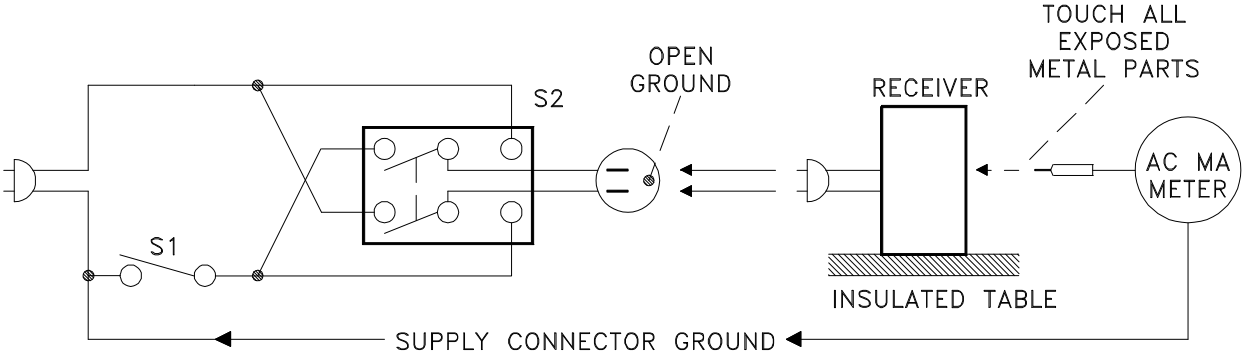

CABINET DISASSEMBLY (FRONT VIEW)

WS-48513 / WS-48613

***Refer to the Parts List for Part Numbers**

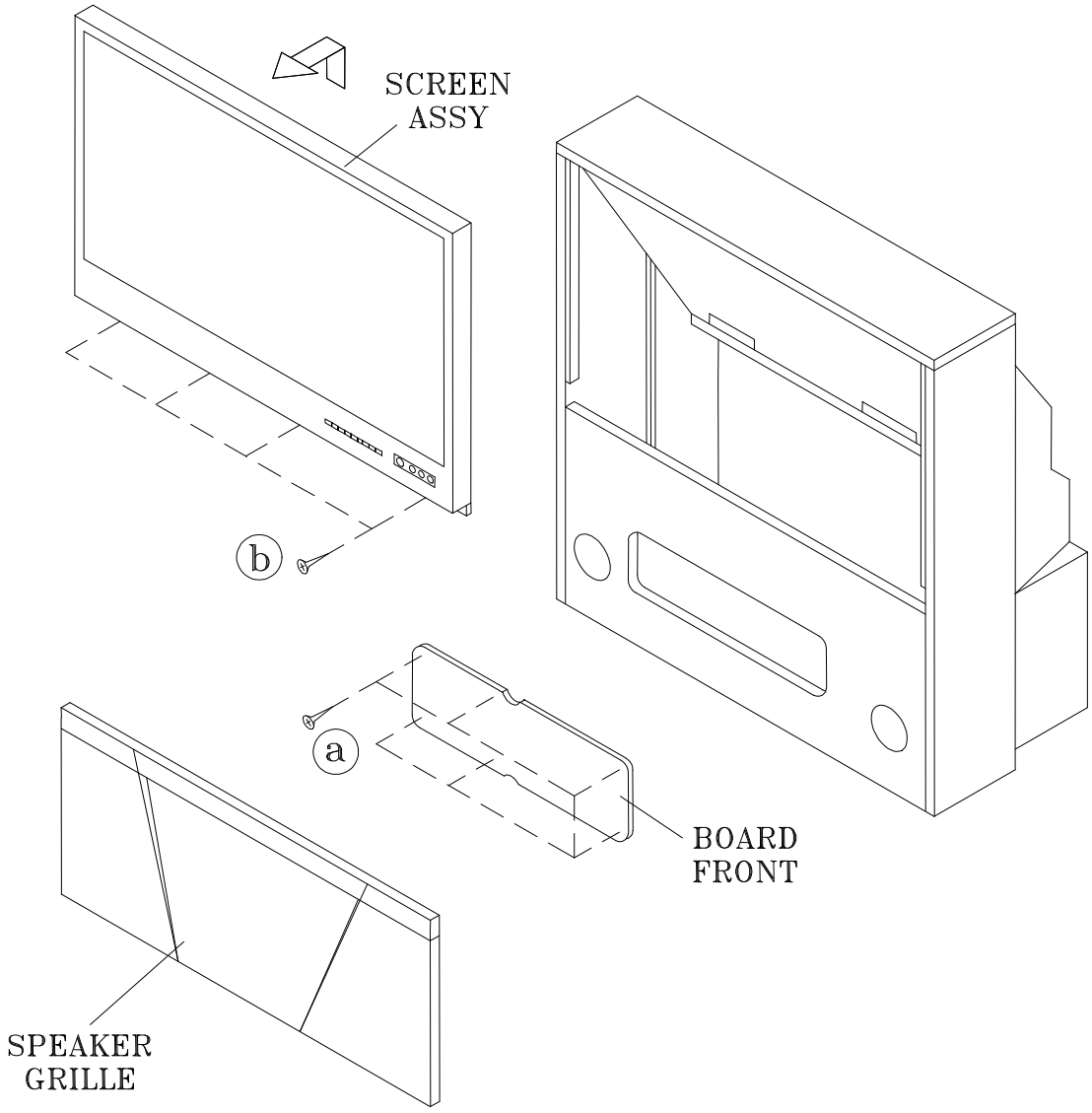

Front Cabinet Disassembly

1. Remove the Speaker Grille by pulling forward.
2. Remove the Board Front by removing 6 screws (a).
3. Remove 4 screws (b) holding the Screen Assembly.
4. Lift the Screen Assembly up and away from the cabinet.

CABINET DISASSEMBLY (REAR VIEW)

WS-48513 / WS-48613

***Refer to the Parts List for Part Numbers**

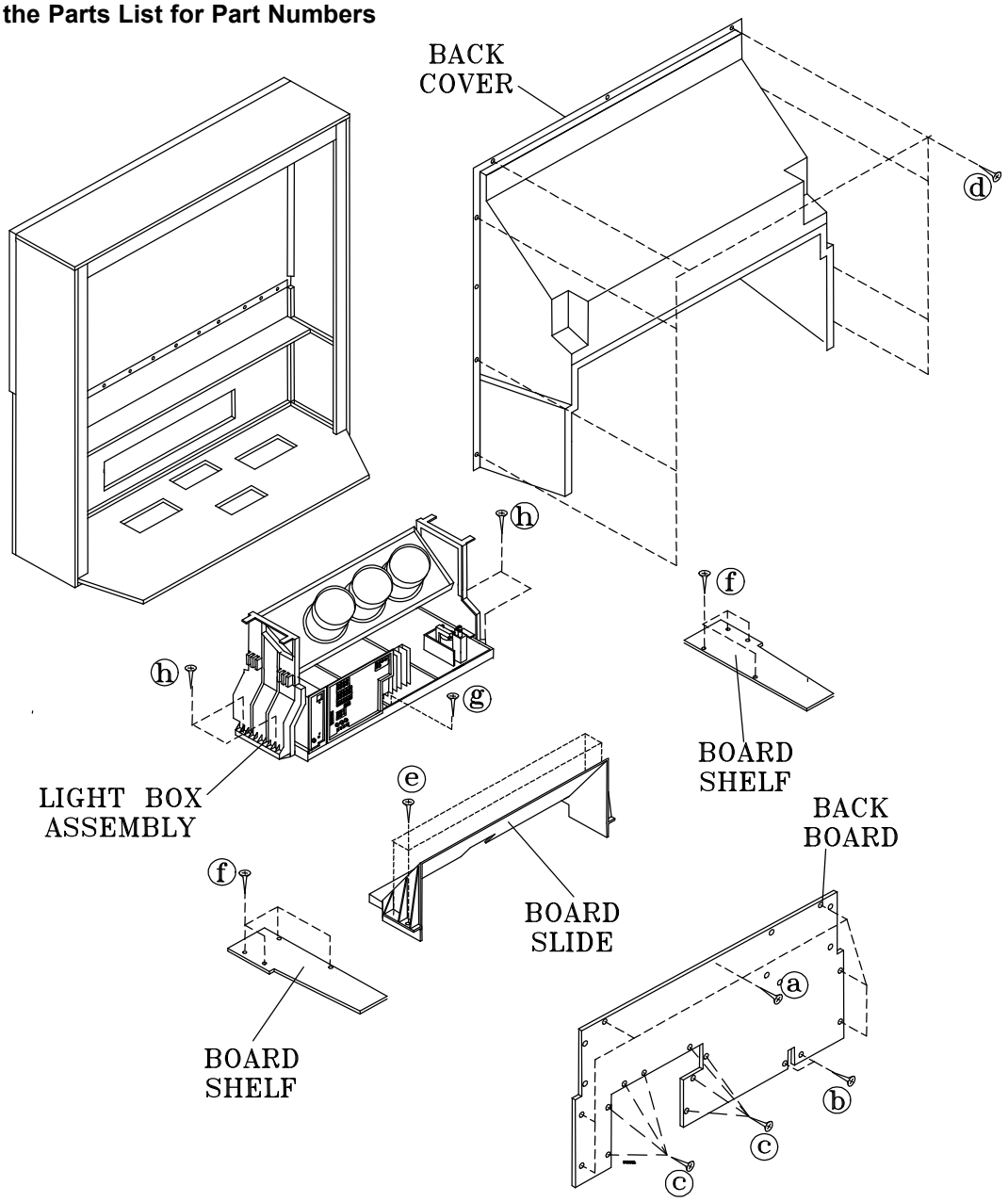

Rear Cabinet Disassembly

1. Remove the Back Board by removing 7 screws (a), 2 screws (b) and 8 screws (c).
2. Remove the Back Cover by removing 8 screw (d).
3 Remove 4 screws (e) to remove the Board Slide.
4. Remove screws (f) to remove the Board Shelves.
5. Remove screw (g) holding the chassis.
6. Remove 4 screws (h) securing the Light Box Assembly.
7. Be certain that all cables and connectors between the Light Box Assembly and external items are disconnected (e.g. speaker plugs, etc.), including the USB and 1394 connectors from the Card Reader to the DM Module.
8. Slide the Light Box Assembly from the cabinet.

CABINET DISASSEMBLY (FRONT VIEW)

WS-55513 / WS-65513 / WS-55613 / WS-65613

***Refer to the Parts List for Part Numbers**

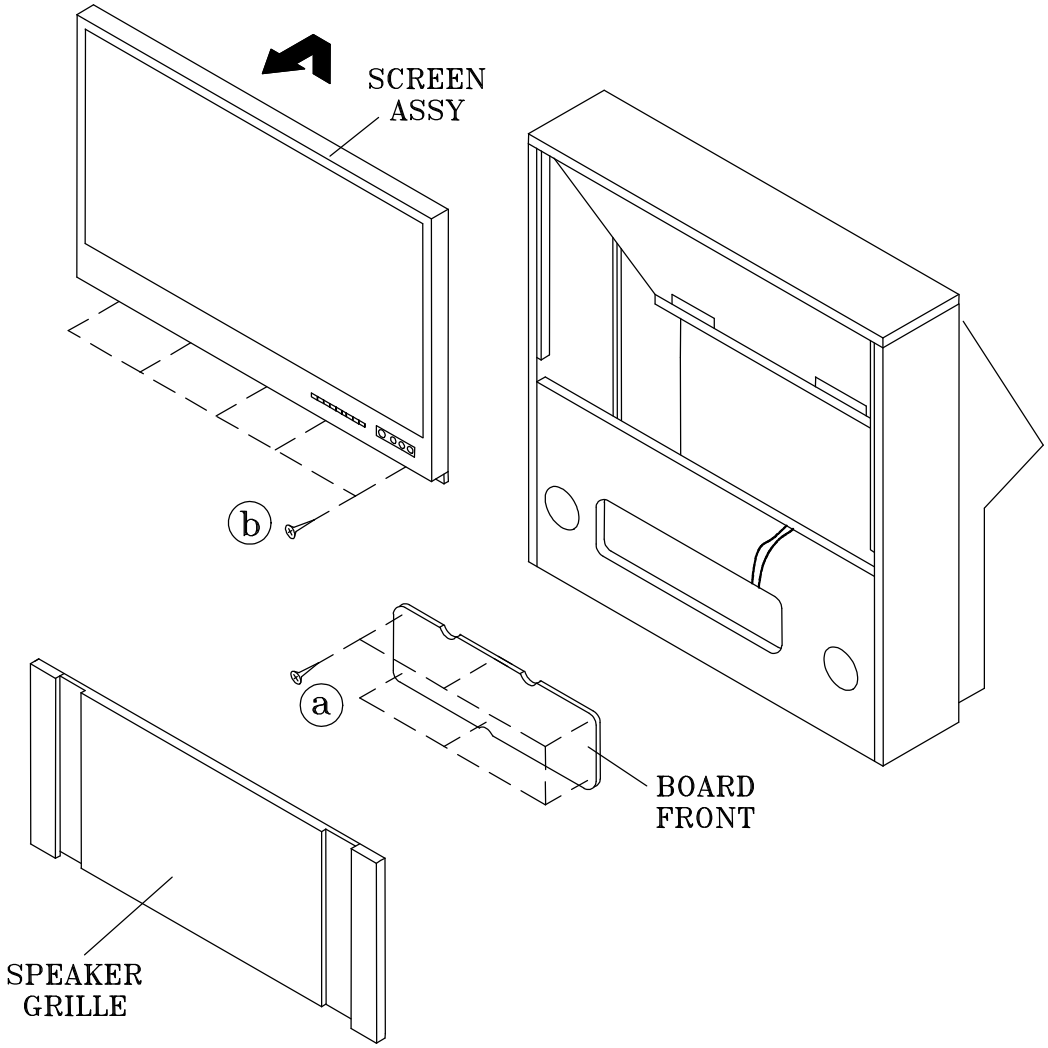

Front Cabinet Disassembly

1. Remove the Speaker Grille by pulling forward.
2. Remove the Board Front by removing 6 screws (a).
3. Remove the 5 screws (b) holding the Screen Assembly.
4. Unplug the cables to the Control Panel and the Front Panel Inputs.
4. Lift the Screen Assembly up and away from the cabinet.

CABINET DISASSEMBLY (REAR VIEW)

WS-55513 / WS-65513 / WS-55613 / WS-65613

***Refer to the Parts List for Part Numbers**

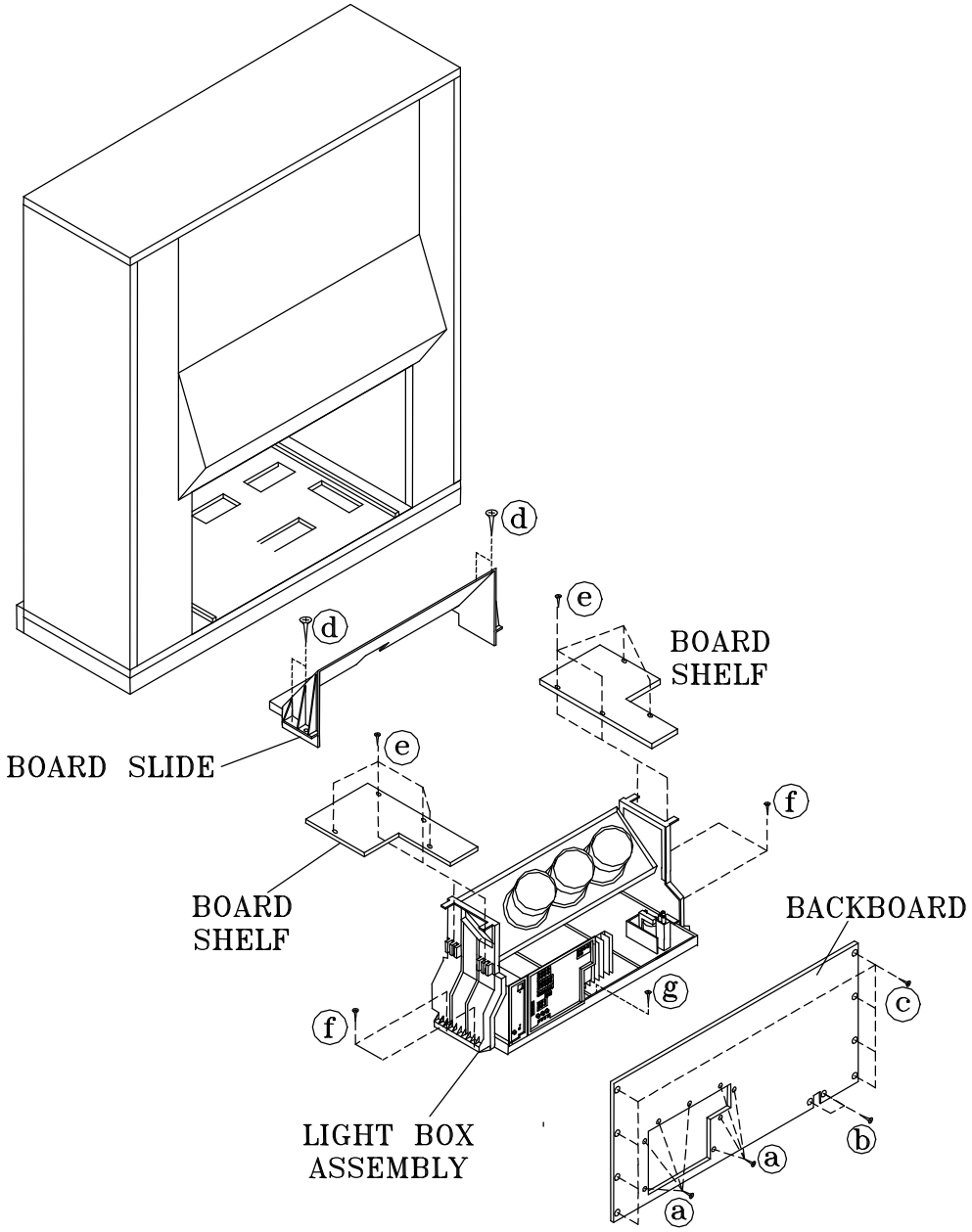

Rear Cabinet Disassembly

1. Remove screws (a), (b) and (c) holding the Back Board.
2. Remove 4 screws (d) holding the Board Slide
3. Remove the 4 screws (e) holding each Board Shelf.
4. Remove screw (g) holding the chassis.
5. Remove 4 screws (f) securing the Light Box Assembly.
6. Be certain that all cables and connectors between the Light Box Assembly and external items are disconnected (e.g. speaker plugs, etc.), including the USB and 1394 cables from the Card Reader.
7. Slide the Light Box out the rear of the Cabinet.

CABINET DISASSEMBLY (FRONT VIEW)

WS-55813

***Refer to the Parts List for Part Numbers**

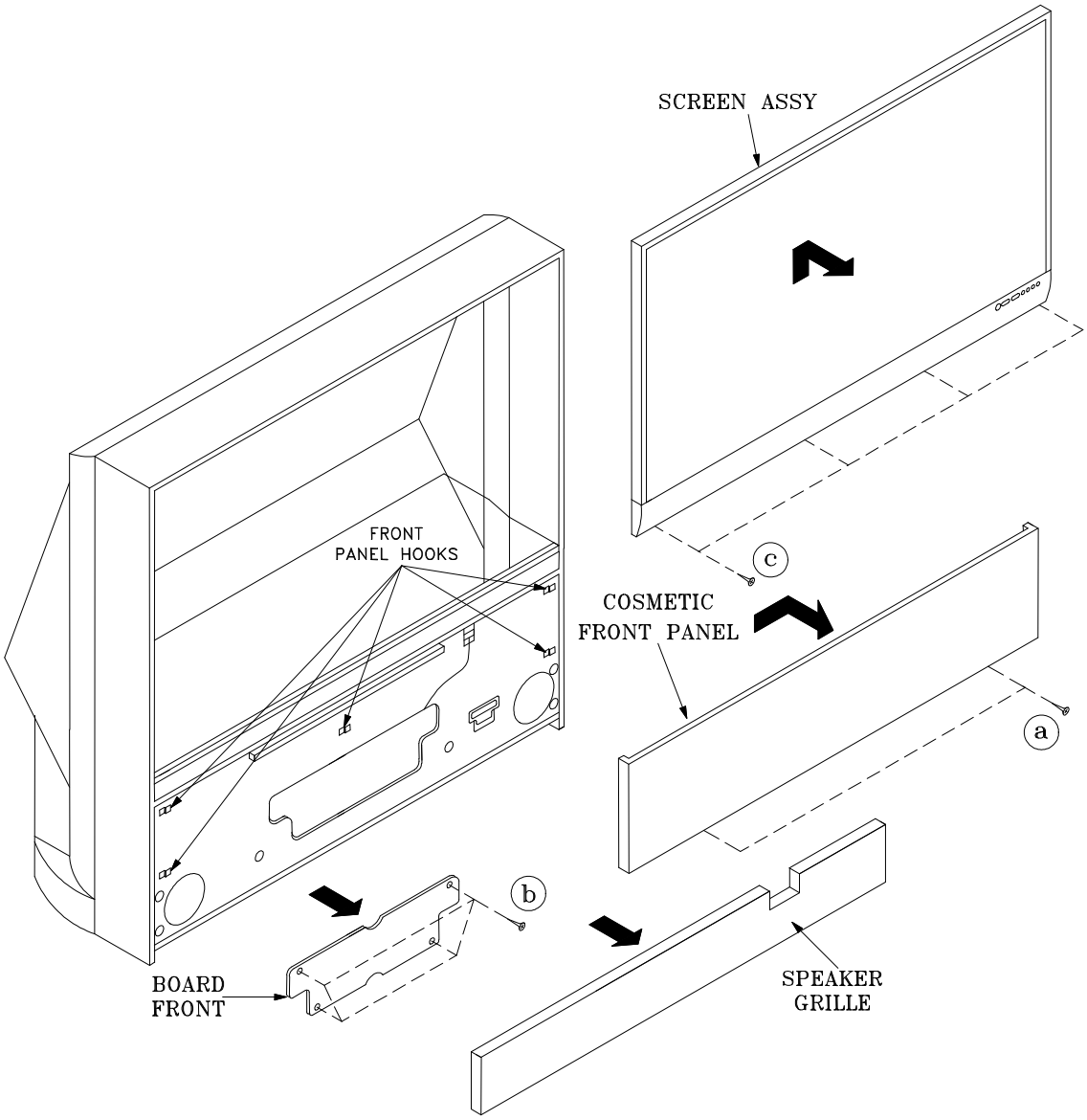

Front Cabinet Disassembly

1. Remove the Speaker Grille by pulling forward.
2. Remove 2 screws (a) securing the Front Panel.
3. Slide the Front Panel 1/2 inch to the right, then pull away from the TV.
4. Remove 4 screws (b) to remove the Board Front.
5. Unplug the the connectors to the Control Panel.
6. Remove the 4 screws (c) securing the Screen Assembly.
7. Lift the Screen Assembly up and away from the cabinet.

CABINET DISASSEMBLY (REAR VIEW)

WS-55813

***Refer to the Parts List for Part Numbers**

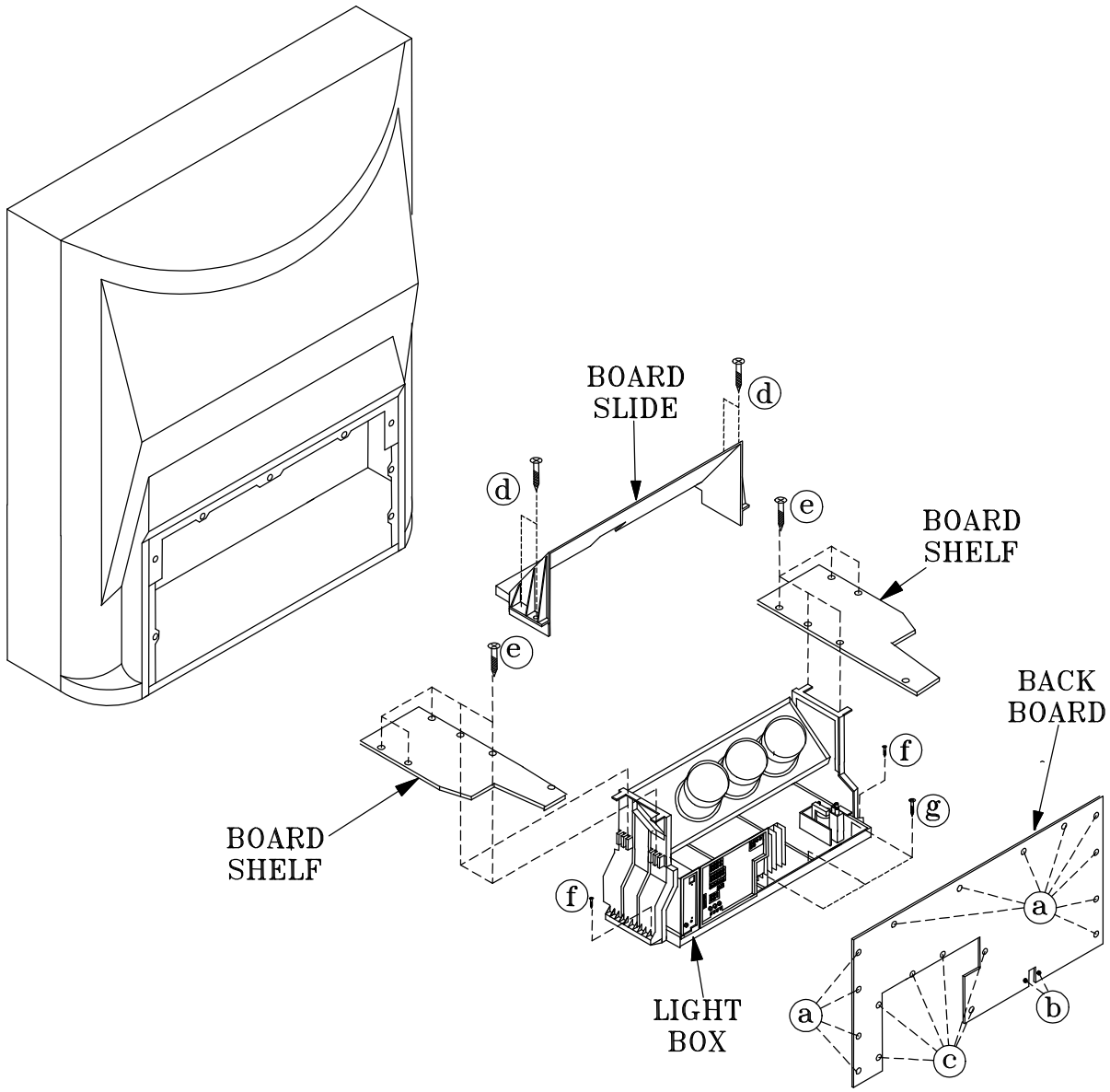

Rear Cabinet Disassembly

1. Remove screws (a), (b) and (c) holding the Back Board.
2. Remove 4 screws (d) holding the Board Slide
3. Remove the 5 screws (e) holding each Board Shelf.
4. Remove screw (f) and 3 screws (g) securing the Light Box Assembly.
5. Be certain that all cables and connectors between the Light Box Assembly and external items are disconnected (e.g. speaker plugs, etc.), including the USB and 1394 cables from the Card Reader..
6. Slide the Light Box out the rear of the Cabinet.

CABINET DISASSEMBLY (FRONT VIEW)

WS-65813

***Refer to the Parts List for Part Numbers**

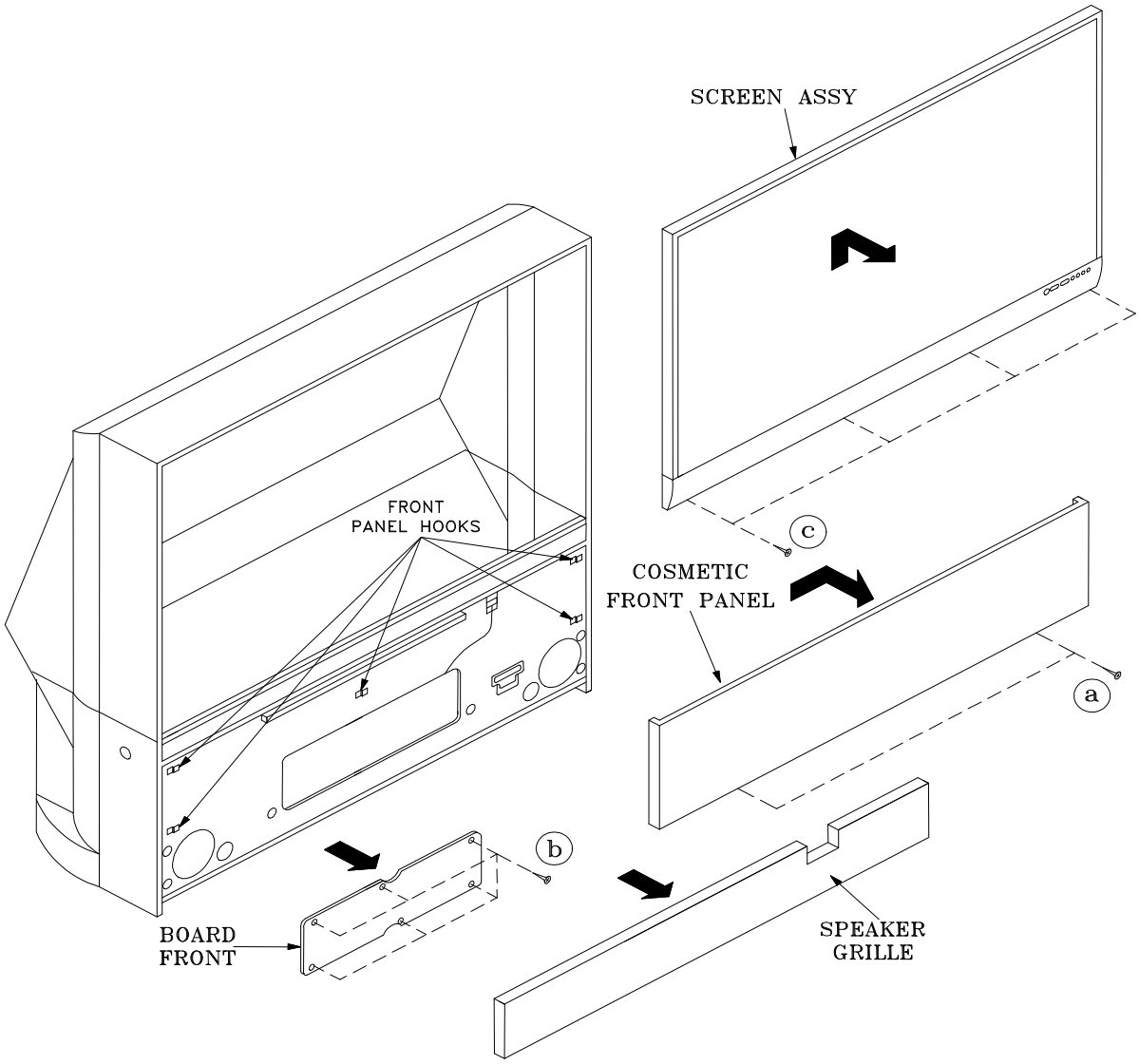

Front Cabinet Disassembly

1. Remove the Speaker Grille by pulling forward.
2. Remove 2 screws (a) securing the Front Panel.
3. Slide the Front Panel 1/2 inch to the right, then pull away from the TV.
4. Remove 6 screws (b) to remove the Board Front.
5. Unplug the connectors to the Screen Assembly.
6. Remove the 4 screws (c) securing the Screen Assembly.
7. Lift the Screen Assembly up and away from the cabinet.

CABINET DISASSEMBLY (REAR VIEW)

WS-65813

***Refer to the Parts List for Part Numbers**

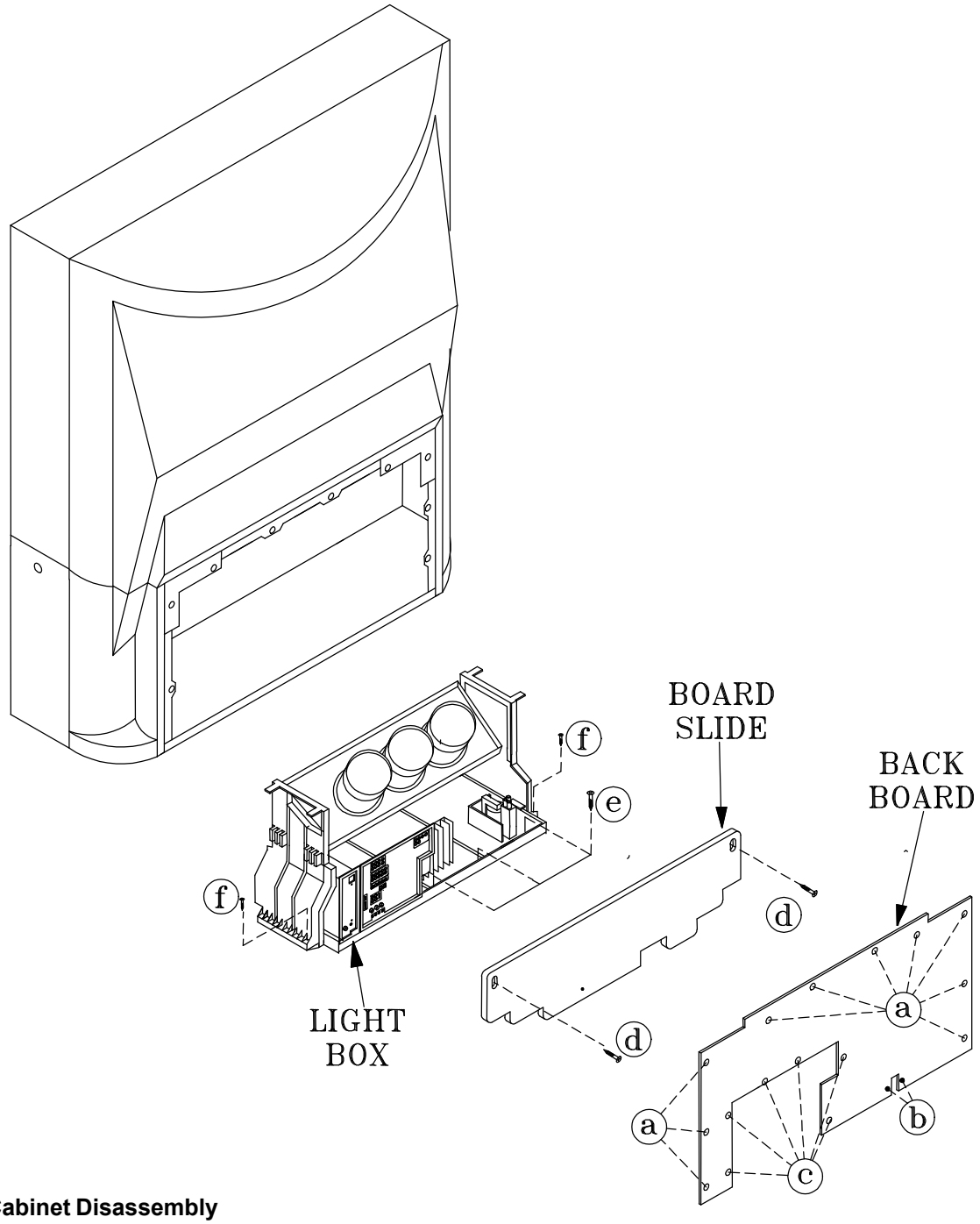

Rear Cabinet Disassembly

1. Remove screws (a), (b) and (c) holding the Back Board.
2. Remove the 2 screws (d) holding the Board Slide.
3. Remove the 3 screws (e) and 2 screws (f) securing the Light Box Assembly.
4. Disconnect cabling to the front panel (Control Panel, Speakers, Inputs, etc.), including the USB and 1394 cables from the Card Reader to the DM Module.
4. Slide the Light Box out the rear of the Cabinet.

CABINET DISASSEMBLY (FRONT VIEW)

WS-73513

***Refer to the Parts List for Part Numbers**

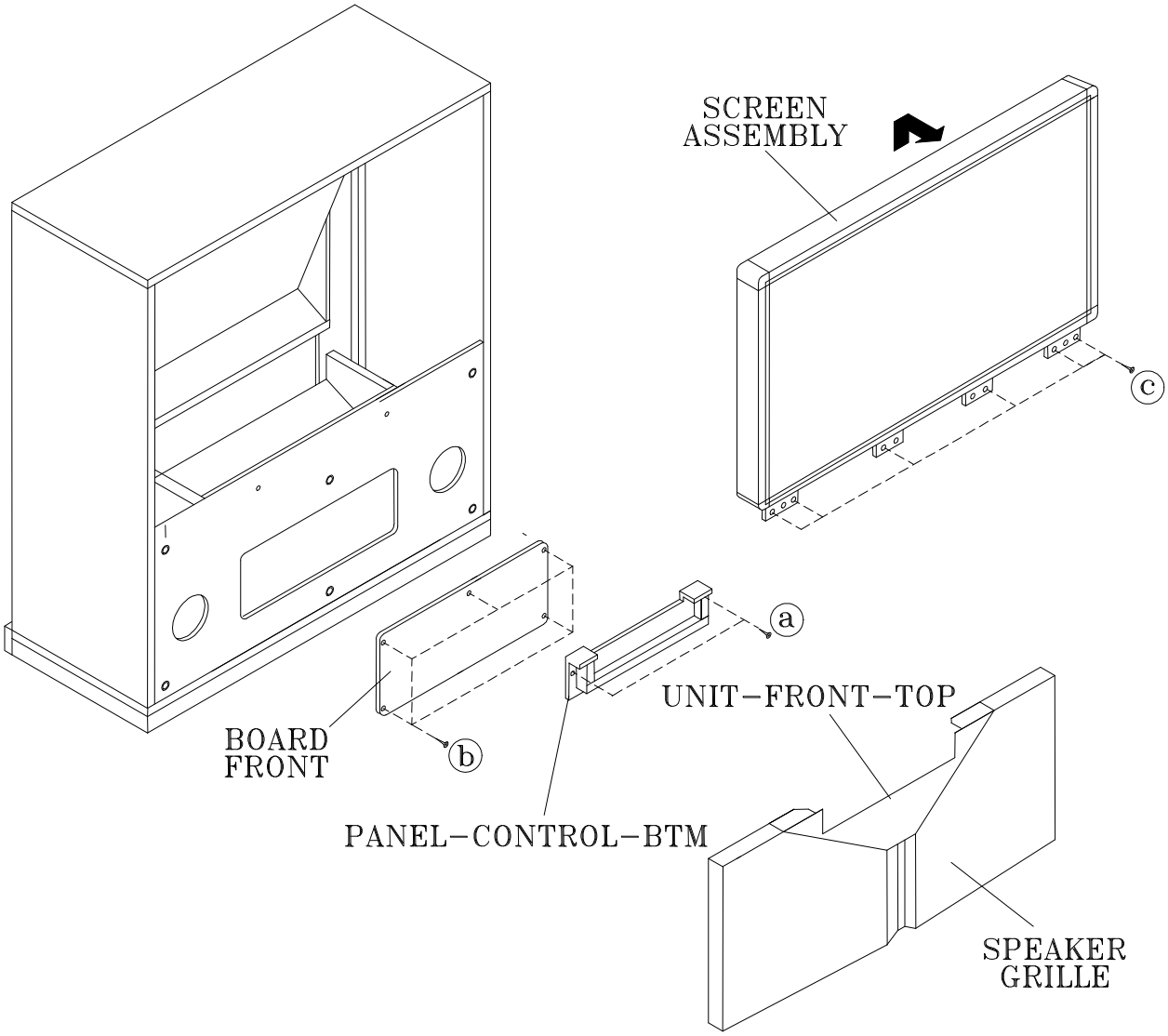

Front Cabinet Disassembly

1. Remove the Speaker Grille by pulling forward.
2. Remove 2 screws (a) securing the PENEL-CONTROL-BTM
3. Remove 5 screws (b) to remove the Board Front.
4. Remove the 6 screws (c) securing the Screen Assembly.
5. Lift the Screen Assembly up and away from the cabinet.

CABINET DISASSEMBLY (FRONT VIEW)

WS-65713 / WS-73713

***Refer to the Parts List for Part Numbers**

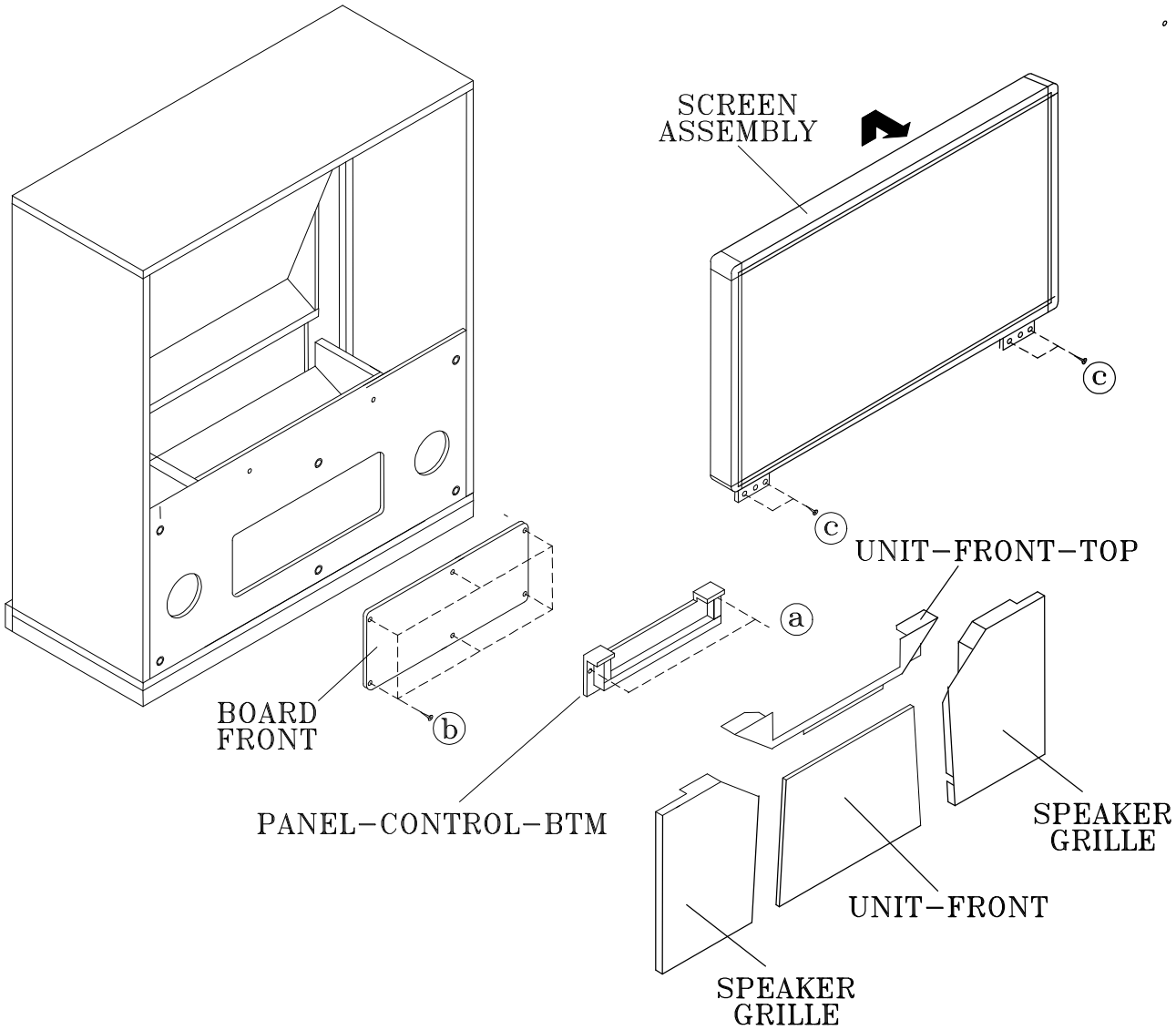

Front Cabinet Disassembly

1. Remove the 2 Speaker Grilles and the Unit Front by pulling forward.
2. Remove 6 screws (b) securing the Board Front.
3. Remove two screws (a) to remove the Control Panel
4. Remove the 4 screws (c) securing the Screen Assembly.
7. Lift the Screen Assembly up and away from the cabinet.

CABINET DISASSEMBLY (REAR VIEW)

WS-65713 / WS-73513 / WS-73713

***Refer to the Parts List for Part Numbers**

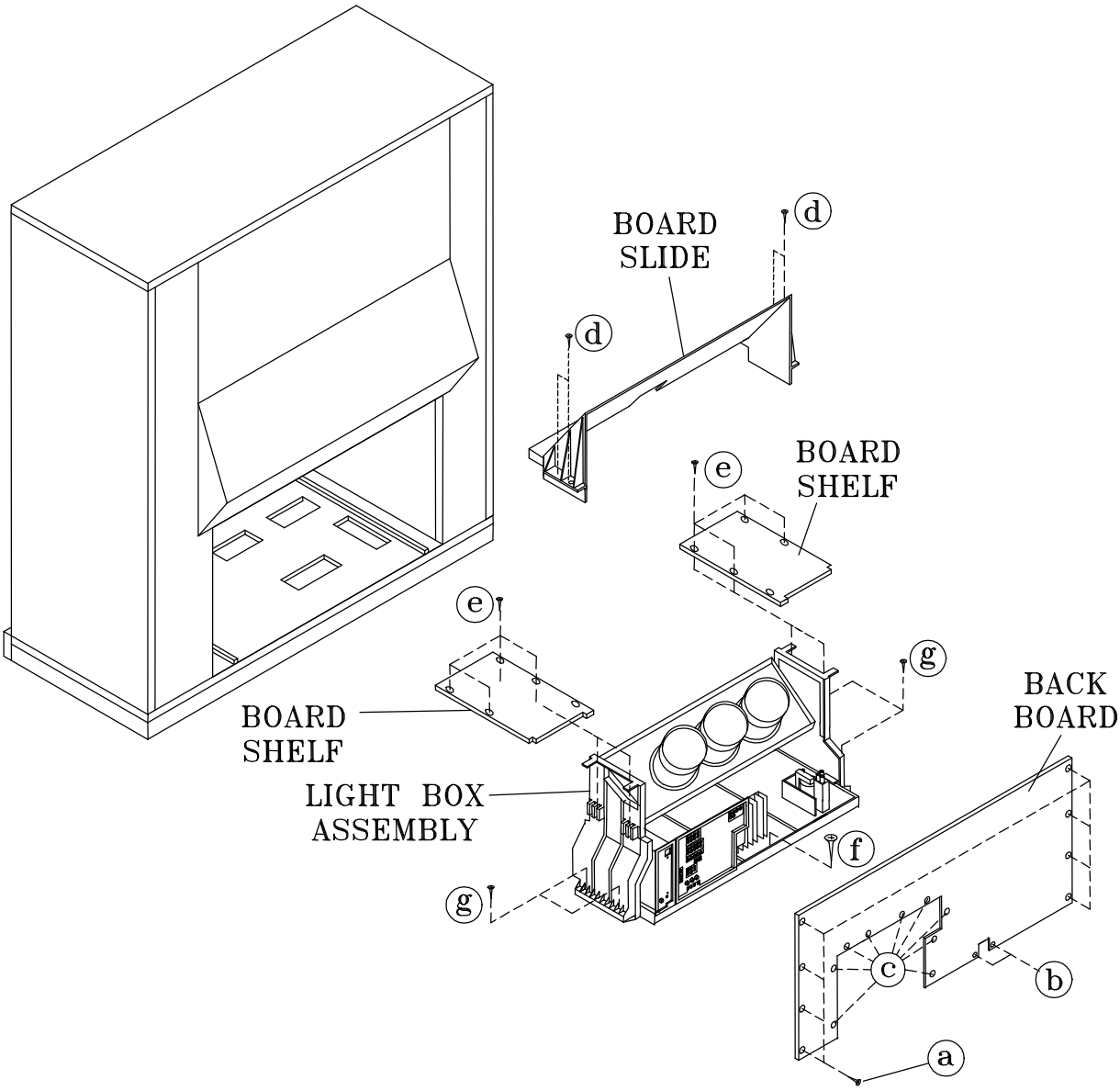

Rear Cabinet Disassembly

1. Remove 8 screws (a), 2 screws(b) and 9 screws (c) holding the Back Board.
2. Remove the 4 screws (d) holding the Board Slide.
3. Rmove 4 screws (e) securing each Board Shelf.
3. Remove the 4 screws (g) and a screw (f) securing the Light Box Assembly.
4. Disconnect cabling to the front panel (Control Panel, Speakers, Inputs, etc.), including the USB and 1394 cables from the Card Reader.
4. Slide the Light Box out the rear of the Cabinet.

SERVICING THE LENTICULAR SCREEN AND FRESNEL LENS

CAUTION: **Wear gloves** when handling the Lenticular Screen and Fresnel Lens. This prevents cuts and finger prints. **Do not place Fresnel Lens in the sun**. This may cause fire and heat related injuries.

WS-48513 / 48613

Lenticular Screen and Fresnel Lens Removal

1. Remove the screen assembly shown in the Cabinet Disassembly procedure.
2. Remove the Top, Bottom and Side Screen Holders.
3. Carefully lift the Lenticular Screen and Fresnel Lens combination from the Screen Frame assembly.

Note: When separating the Lenticular Screen from the Fresnel Lens, use caution while prying the Screen and Lens apart. Use a slot type screw driver, and remove the pressure sensitive double sided tape.

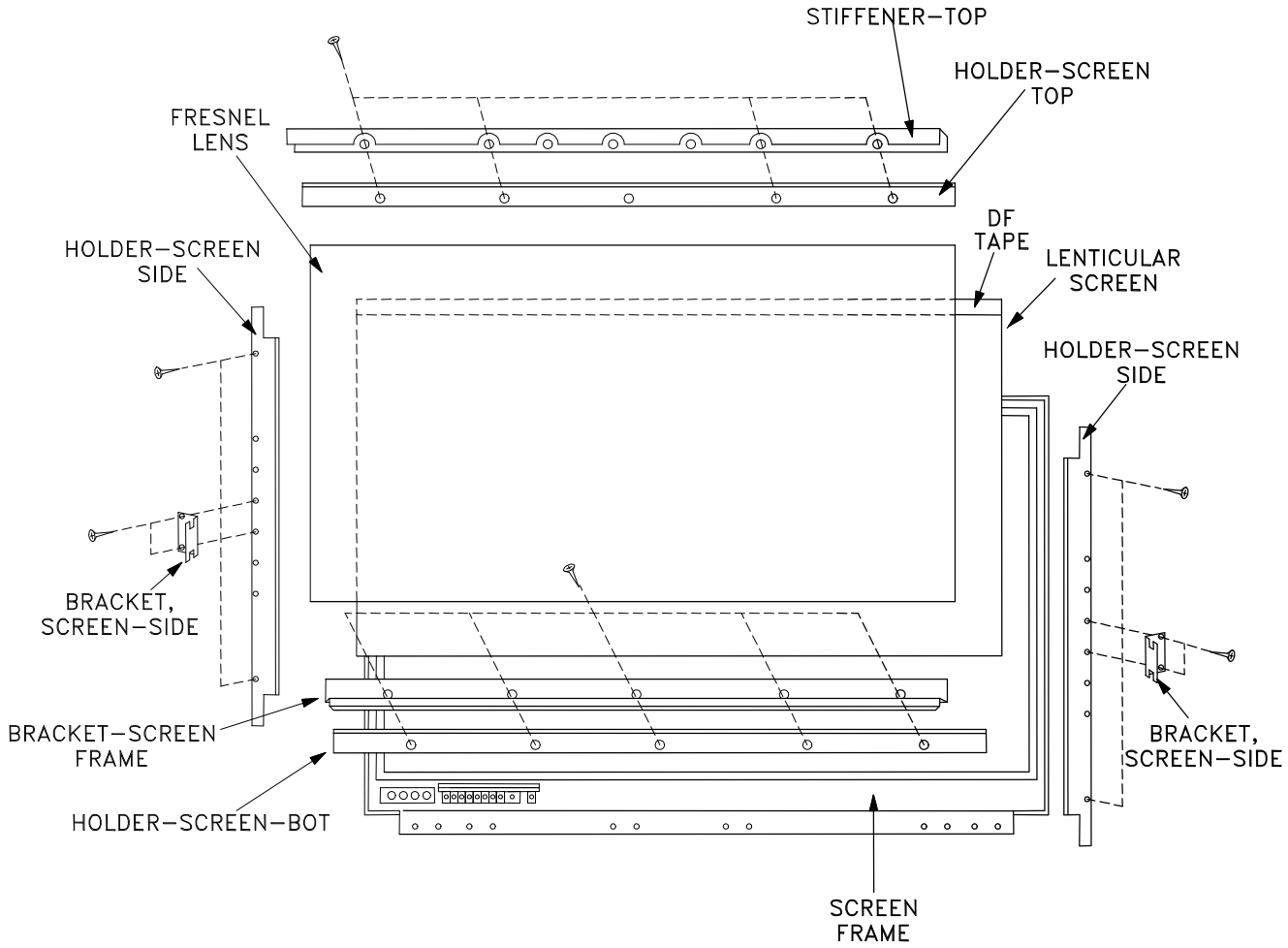

SERVICING THE LENTICULAR SCREEN AND FRESNEL LENS

WS-55513 / WS-55613 / WS-65513 / WS-65613

CAUTION: **Wear gloves** when handling the Lenticular Screen and Fresnel Lens. This prevents cuts and finger prints. **Do not place Fresnel Lens in the sun**. This may cause fire and heat related injuries.

1b. Lenticular Screen and Fresnel Lens Removal

1. Remove the screen assembly as shown in the Cabinet Disassembly procedure.
2. Remove the HOLDER-SCREEN-BOTTOM.
3. Carefully slide the Lenticular Screen and Fresnel Lens combination from the upper Screen Frame Assembly.

Note: When separating the Lenticular Screen from the Fresnel Lens, use caution while prying the Screen and Lens apart. Use a slot type screw driver, and remove the pressure sensitive double sided tape.

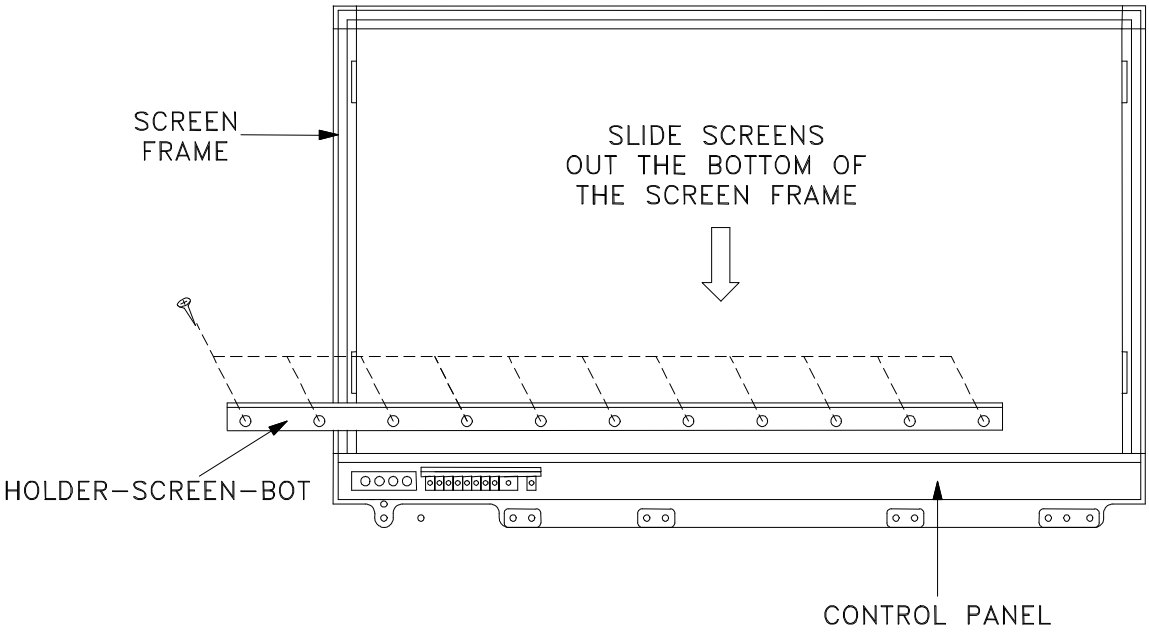

1b. Installing the Fresnel Lens and Lenticular Screen

1. Insert the Lenticular Screen and Fresnel Lens combination into the upper Screen Frame.
2. Install the HOLDER-SCREEN-BOTTOM, install the end screws first. .

SERVICING THE LENTICULAR SCREEN AND FRESNEL LENS

CAUTION: **Wear gloves** when handling the Lenticular Screen and Fresnel Lens. This prevents cuts and finger prints. **Do not place Fresnel Lens in the sun**. This may cause fire and heat related injuries.

WS-55813 / WS-65813

Lenticular Screen and Fresnel Lens Removal

1. Remove the screen assembly shown in the Cabinet Disassembly procedure.
2. Remove the Screen Frame top section by removing 4 screws (a).
3. Carefully grasp the Lenticular Screen and Fresnel Lens combination and pull upward and out of the Screen Frame Assembly.

Note: When separating the Lenticular Screen from the Fresnel Lens, use caution while prying the Screen and Lens apart. Use a slot type screw driver, and remove the pressure sensitive double sided tape.

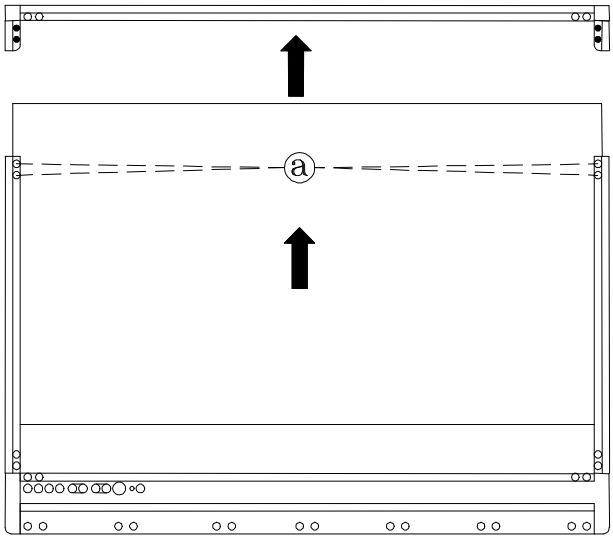

Rear View

SERVICING THE LENTICULAR SCREEN AND FRESNEL LENS

CAUTION: **Wear gloves** when handling the Lenticular Screen and Fresnel Lens. This prevents cuts and finger prints. **Do not place Fresnel Lens in the sun**. This may cause fire and heat related injuries.

WS-65713 / WS-73713

Lenticular Screen and Fresnel Lens Removal

1. Remove the screen assembly shown in the Cabinet Disassembly procedure.
2. Remove the Screen Frame bottom section by removing 4 screws (a).
3. Carefully grasp the Lenticular Screen and Fresnel Lens combination and pull downward and out of the Screen Frame Assembly.

Note: When separating the Lenticular Screen from the Fresnel Lens, use caution while prying the Screen and Lens apart. Use a slot type screw driver, and remove the pressure sensitive double sided tape.

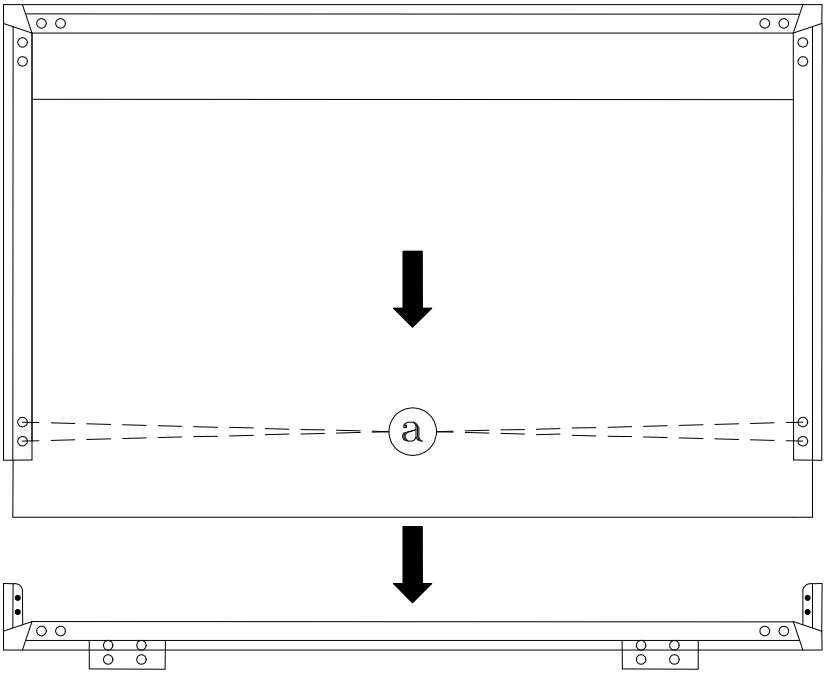

Rear View

SERVICING THE LENTICULAR SCREEN AND FRESNEL LENS

CAUTION: **Wear gloves** when handling the Lenticular Screen and Fresnel Lens. This prevents cuts and finger prints. **Do not place Fresnel Lens in the sun**. This may cause fire and heat related injuries.

WS-73513

Lenticular Screen and Fresnel Lens Removal

1. Remove the screen assembly shown in the Cabinet Disassembly procedure.
2. Remove the Screen Frame top section by removing 4 screws (a).
3. Carefully grasp the Lenticular Screen and Fresnel Lens combination and pull upward and out of the Screen Frame Assembly.

Note: When separating the Lenticular Screen from the Fresnel Lens, use caution while prying the Screen and Lens apart. Use a slot type screw driver, and remove the pressure sensitive double sided tape.

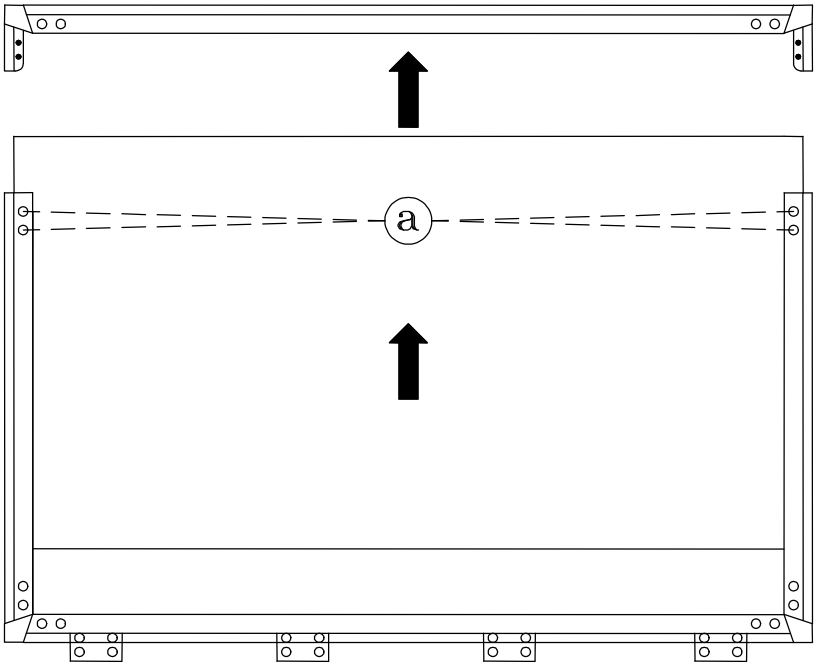

Rear View

SERVICING THE LENTICULAR SCREEN AND FRESNEL LENS

2. Lenticular Screen and Fresnel Lens Installation.

Note: Store the Lenticular Screen and Fresnel Lens in a cool dry place. High humidity may deform the Lenticular Screen and Fresnel Lens.

1. Apply double coated tape (Part # LENS-TAPE) along the top front edge of the Fresnel Lens as shown below. Refer to the Table below for proper tape length.
2. Place the Fresnel Lens on top of the Lenticular Screen and apply pressure at the top edge to bond them together as shown below.

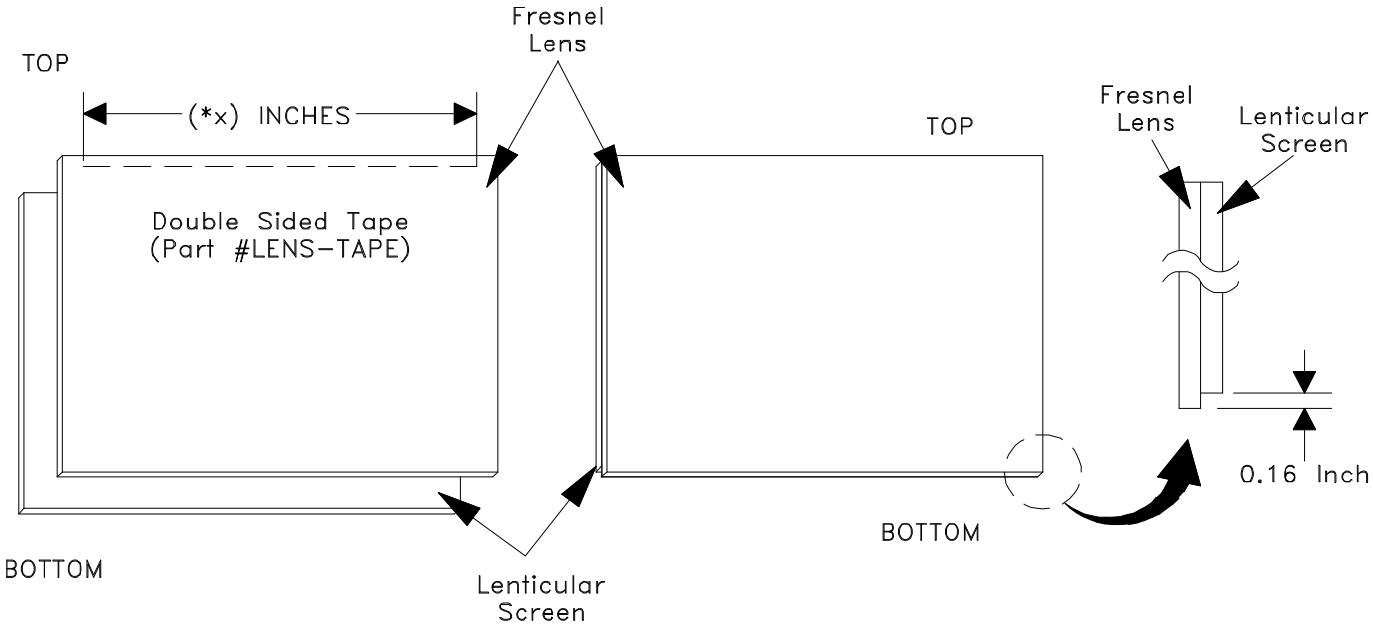

Model	Screen Size	Tape Length
WS-48513	48"	41,8"
WS-48613	"	"
WS-55513	55"	47.8"
WS-55613	"	"
WS-55813	"	"
WS-65513	65"	56.5"
WS-65613	"	"
WS-65713	"	"
WS-65813	"	"
WS-73513	73"	63.5"
WS-73713	"	"

SERVICING THE DIAMONDSHIELD™

1. DiamondShield™ Removal Procedure

The appropriate disassembly procedure given below.

Note: ***Wear gloves when handling the DiamondShield™ to prevent finger prints.***

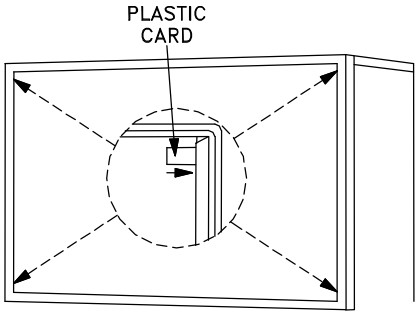

1. Gently insert a small plastic card (such as a credit card or a plastic putty knfe) between the DiamondShield™ and one end of the clip to pry the clip loose.

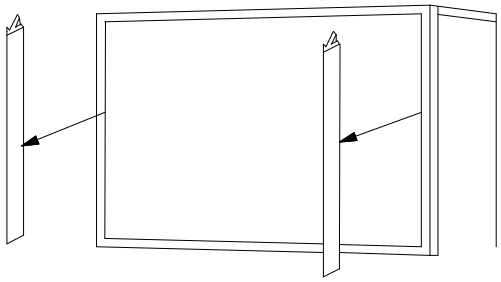

2. Remove both clips by pulling them toward you.

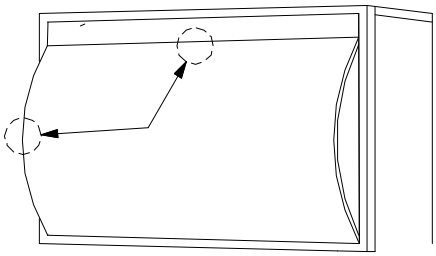

3. Carefully insert the small plastic card (or plastic putty knife) into the gap at the side/center point of the Shield and pull the Shield slightly away from the unit. Place your hands at the points shown and gently bow the Shield toward you and remove from the unit.

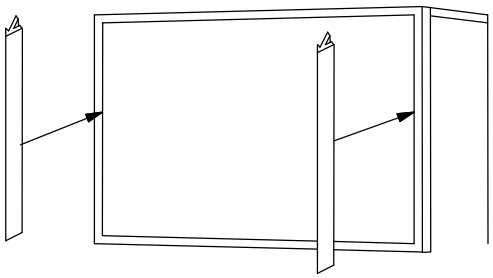

4. Reinstall the two clips

2. DiamondShield™ Installation Procedure

*(See the Parts List for DiamondShield™ part numbers)

To install the DiamondShieldTM, reverse the above Removal Procedure.

CABINET SEPARATION

Mitsubishi 65 and 73 inch Projection TVs have been assembled in two pieces. These pieces may be separated for easier delivery and setup. The cabinet separation procedure requires two persons and varies between models.

WS-65813 Cabinet Separation Procedure

Figure 1

1. Remove the Speaker Grille by pulling forward.
2. Remove the two Front Cover screws (a).
3. To remove the Front Cover, slide to the right approximately 1/2", then pull away from the TV.

Figure 2

4. Remove Screw (b) from the front board.
5. Disconnect the LF connector.

Figure 3

6. Remove screw (c) on each side of the cabinet.
7. Remove the plastic cover on each side.

Figure 4

8. Slide the top of the cabinet top forward.

Figure 5

9. Carefully lift the cabinet top until the interlock tabs clear the cabinet bottom

Figure 6

10. Carefully place the cabinet top on the floor as shown.

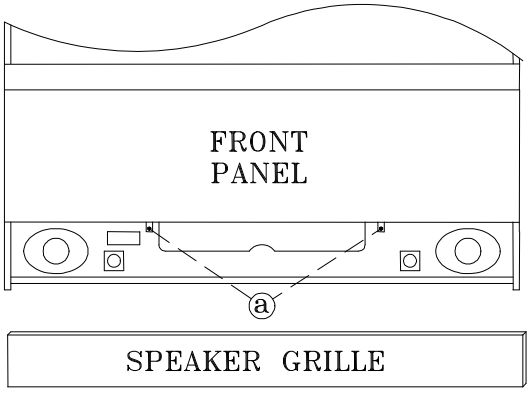

Figure 1

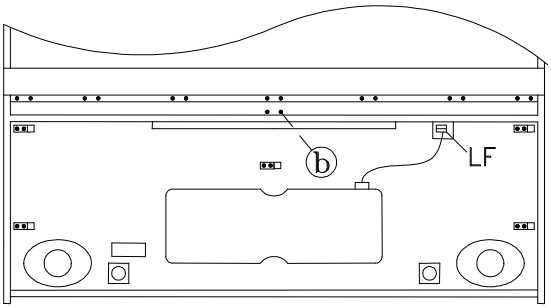

Figure 2

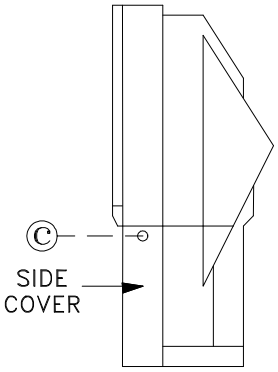

Figure 3

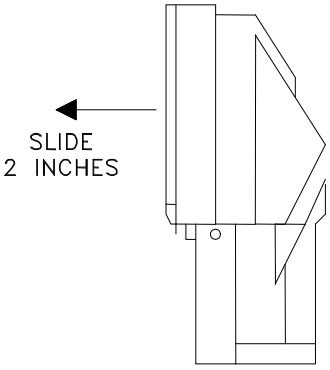

Figure 4

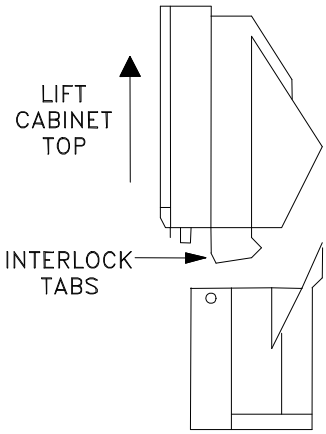

Figure 5

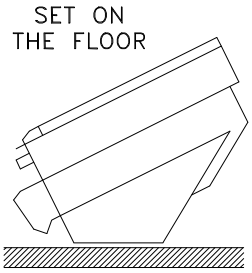

Figure 6

CABINET SEPARATION PROCEDURE
(WS-65513 / WS-65613 and WS-65713 / WS-73513 / WS-73713)

WS-65513 / WS-65613
Cabinet Separation Precedure

1. Pull the Speaker Grill from the cabinet.
2. Unplug the CC and ZF connectore
3. Remove 4 plastic covers and screws (a) from each side of the cabinet.
4. Carefully lift the cabinet top and place it on the floor.
5. Place the cabinet bottom in the desired location.
6. Reverse the procedure and mount the cabinet top on the cabinet bottom.

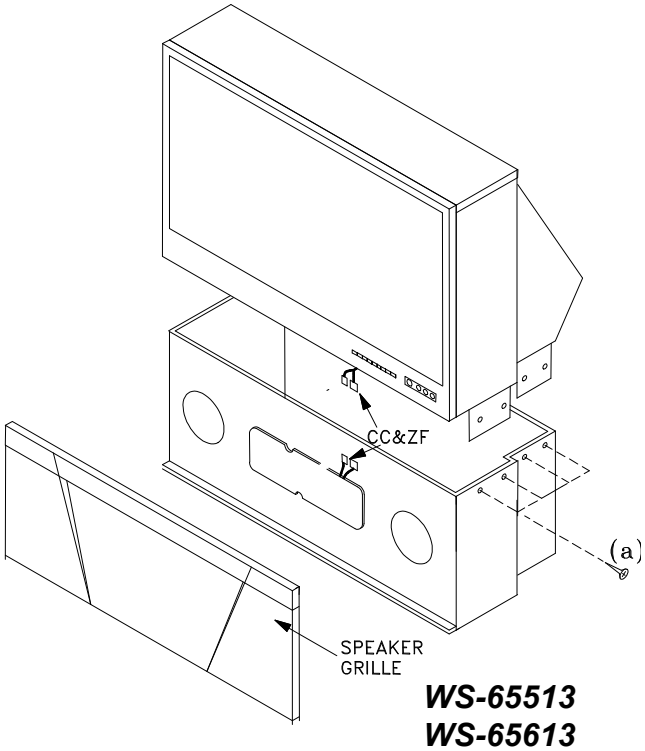

WS-65513
WS-65613

WS-65713 / WS-73513 / WS-73713
Cabinet Separation Precedure

1. Remove the 4 screw covers (a).
2. Remove 4 screws (b) securing the top and bottom cabinet sections .
3. Carefully lift the cabinet top and place it on the floor.
4. Place the cabinet bottom in the desired location.
5. Reverse the procedure and mount the cabinet top on the cabinet bottom.

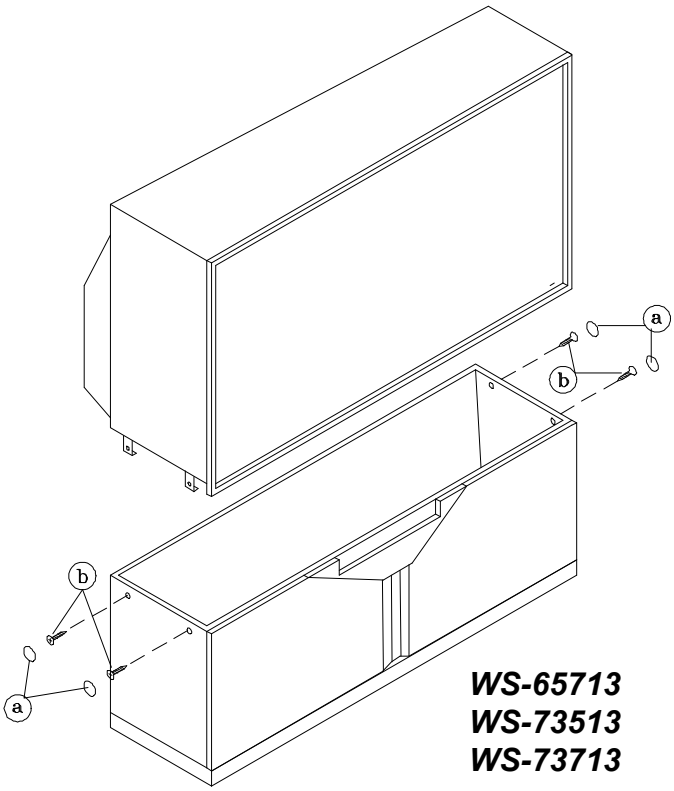

WS-65713
WS-73513
WS-73713

Main Chassis Removal

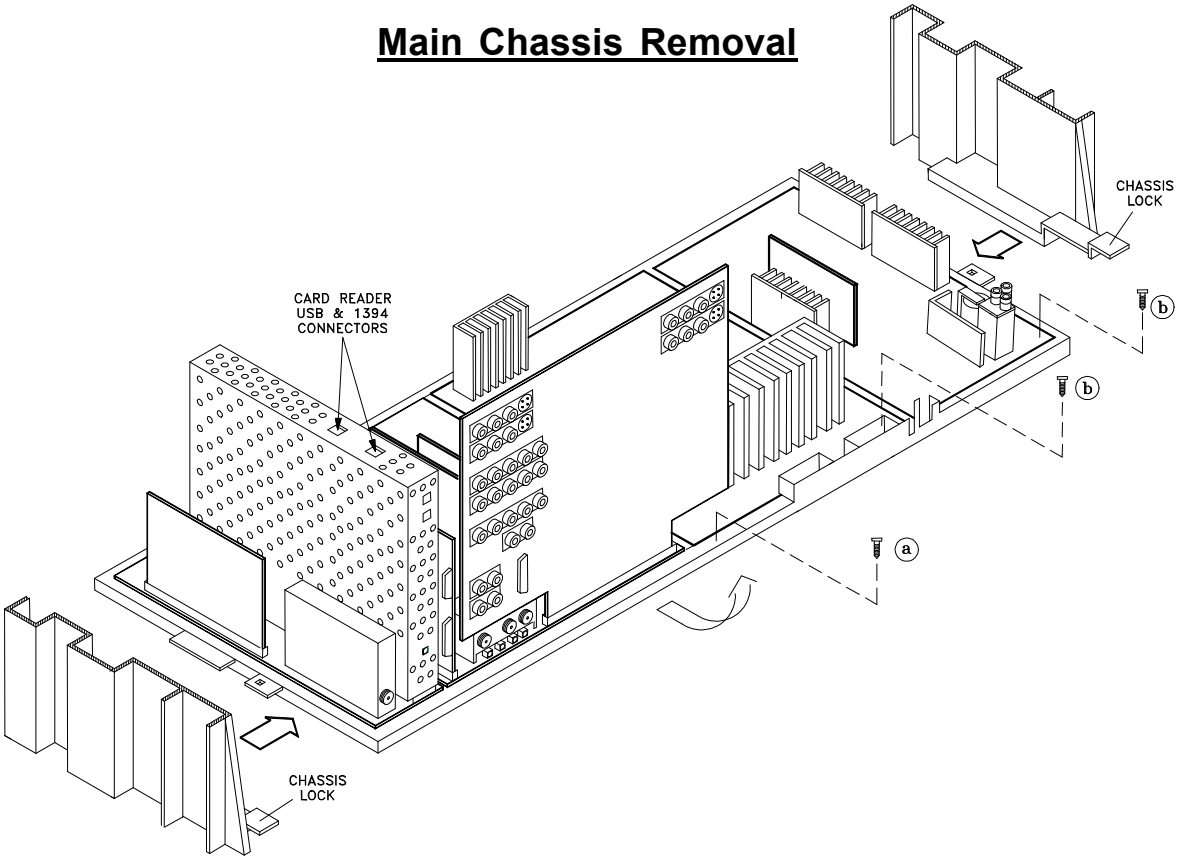

Chassis Removal

1. Undo the cable wire ties to the Front Panel, Speakers, CRTs, etc.
2. Unplug the Card Reader USB and 1394 cables from the DM module.
2. Remove screw (a) securing the Main Chassis [and screws (b) in models WS-55813 and WS-65813] .
3. Release the Chassis Locks on each side of the chassis.
4. Slide the Chassis out the rear of the unit.
5. Tilt upward to access the bottom of the main chassis.

PCB Locations

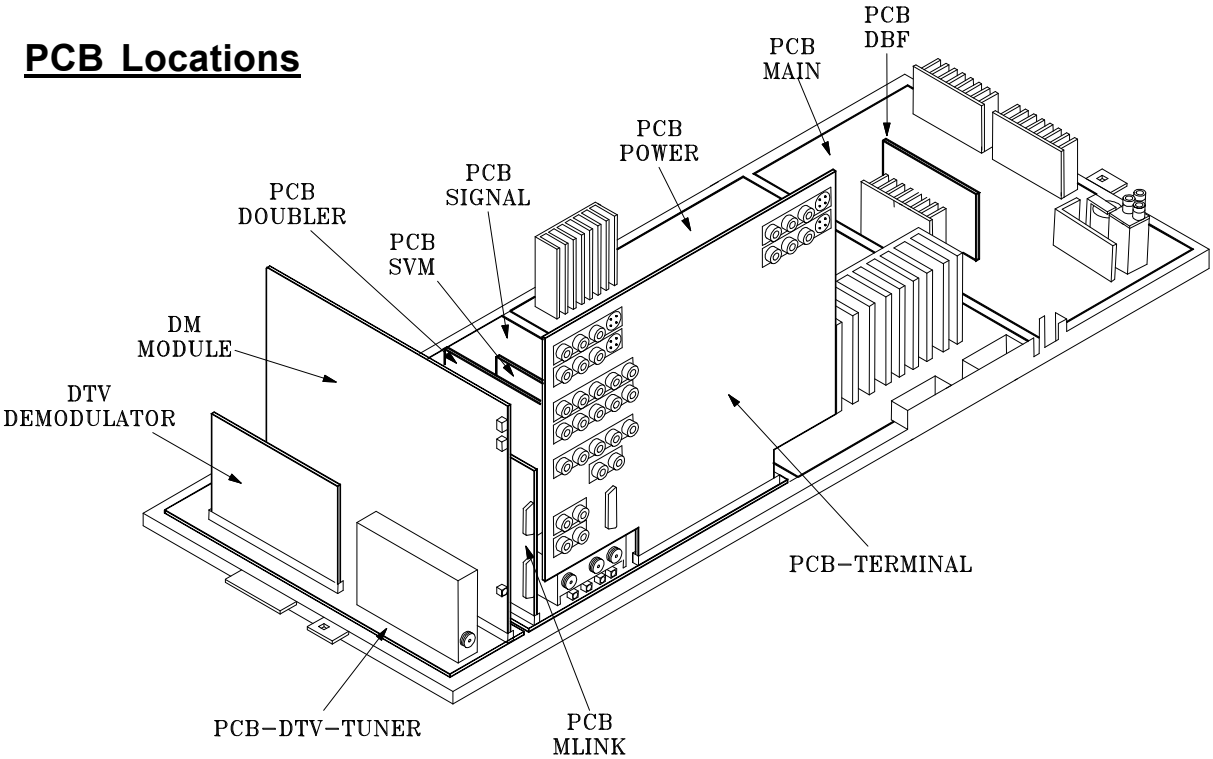

Main Components Location (Top View)

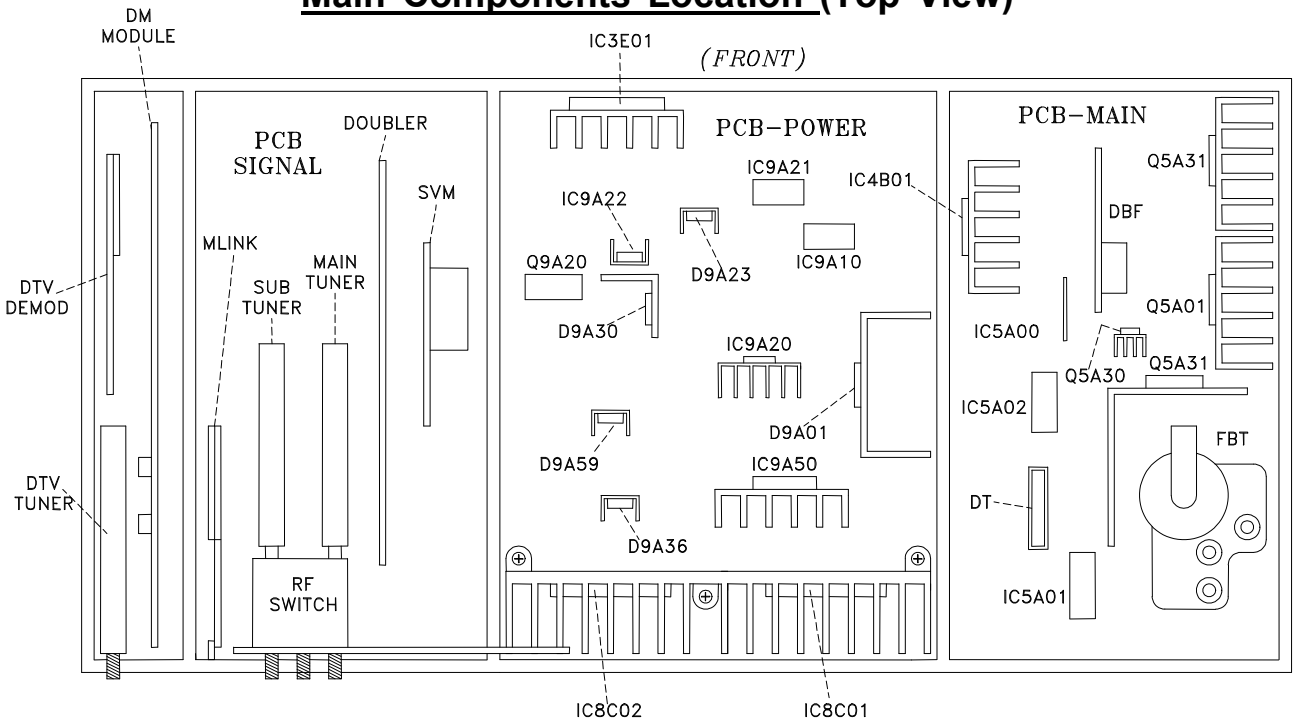

DM Module Replacement

1. Unplug the Card Reader USB and 1394 cables from the DM module, and refer to the Chassis Removal Procedure to slide the chassis towards the rear of the set.
2. Remove screws (a), to remove the DM Rear Panel, *Figure 1*.
3. Remove screws (a) and (b) to remove the DM Module Cover, *Figure 2.*
3. Remove the E2P module from the original DM and plug it into the replacement DM.
5. Plug the DM module securely into the PCB-DTV-TUNER.
6. Check operation before installing the DM Cover, *Figure 3.*
   - Insert insulation (cardboard) between the Demodulator Ground Spring and the DM.
   - Plug the set in and check the operation.
   - If O.K., uplug the set and install the DM Cover.

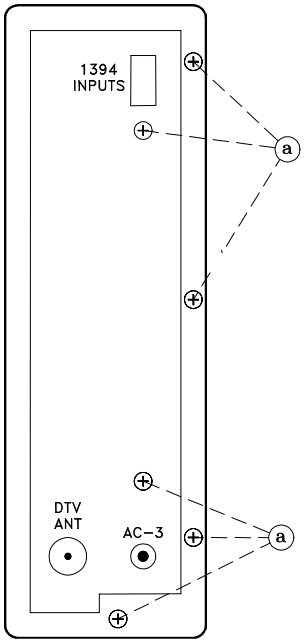

Figure 1: DM Rear Panel

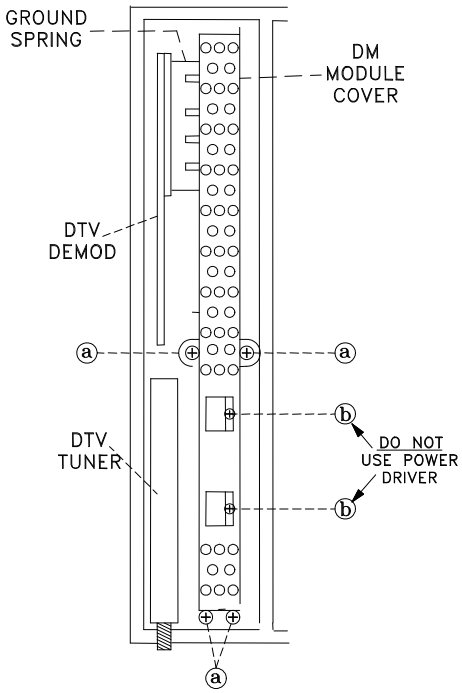

Figure 2: DM Module Cover

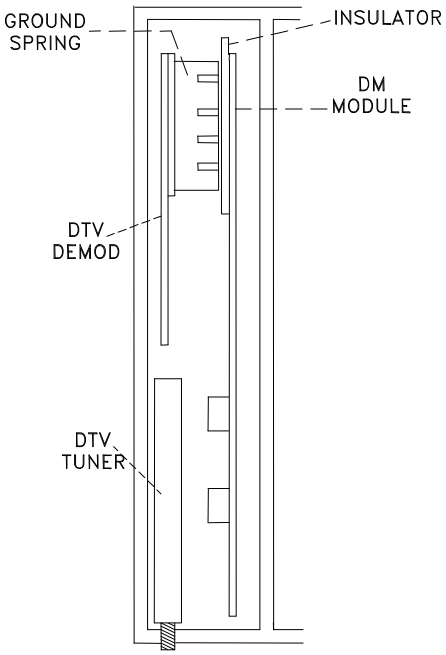

Figure 3: Checking new DM Operation

CRT REPLACEMENT

1. Removal of the CRT

Caution! High voltage should be completely discharged prior to CRT removal. Since The CRTs receive high voltage from the HV Block, discharge by shorting the open end of the respective high voltage cable to chassis ground.

Note: Refer to the Cabinet Disassembly Procedures when performing steps 1 through 4.

1. Remove the Speaker Grille, Front Board, and Screen Assy.
2. Remove the Back Board.
3. Remove the Anode Lead Wire from the CR Block.
4. Remove the PCB-CRT.
5. Remove 4 hex-screws "a" retaining the Optical Unit. [Figure 5-1]
6. Remove 4 screws "b" retaining the Lens.

Note: DO NOT loosen the RED screws. Doing so will break the seal between the C-Element and the # 6 Lens, causing leakage of the CRT Coolant.

7. Remove 4 screws "c" retaining the CRT. [Figure 5-2]
8. Remove the Deflection Yoke from the neck of the CRT. [Figure 5-7]

Figure 5-1

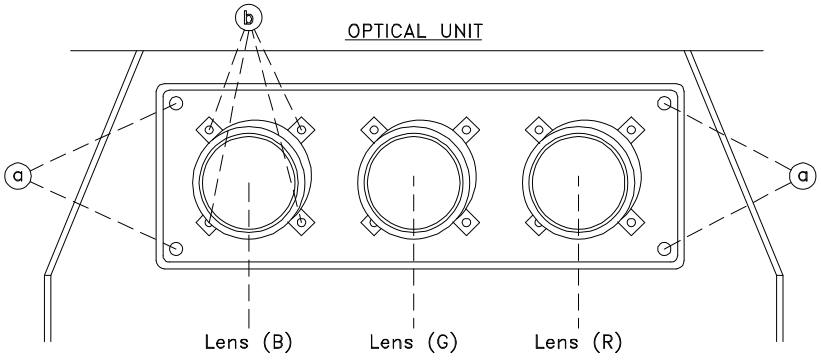

Figure 5-2

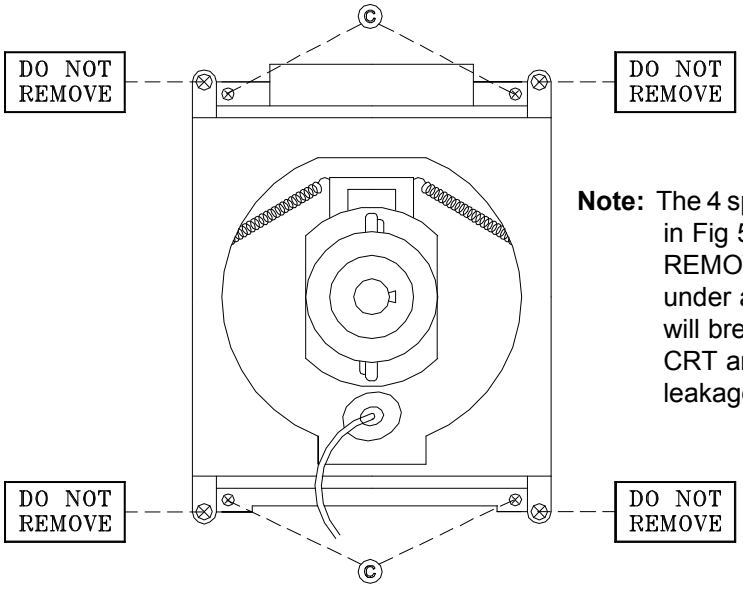

Note: The 4 spring-loaded screws shown in Fig 5-2 and labeled as "DO NOT REMOVE", should not be loosened under any circumstance. Doing so will break the seal between the CRT and the CRT-Spacer, causing leakage of the CRT Coolant.

2. Installation of the CRT

Note: The replacement CRT is supplied as an assembly comprised of the CRT and the Inner Lens with the space between them filled with ethylene glycol. Care should be taken during handling and installation to prevent shock from disrupting the seal or alignment between the CRT and Inner Lens. [Figure 5-3]

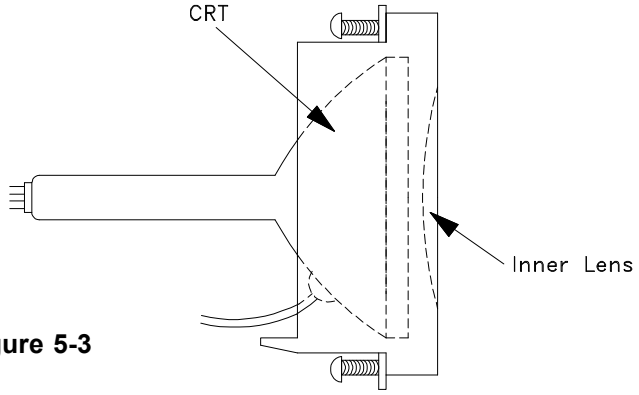

Figure 5-3

Note: The CRT fixing screws should not be loosened nor should they be removed. [Figure 5-4]

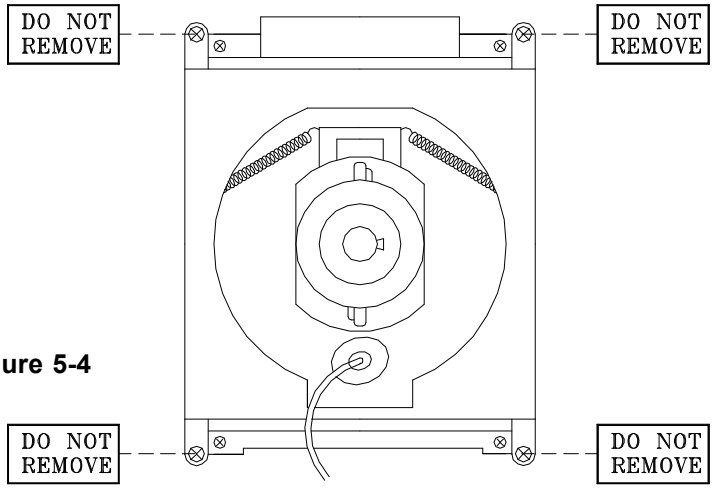

Figure 5-4

1. Carefully position the replacement CRT and fasten in place using 4 screws "d". [Figure 5-6]

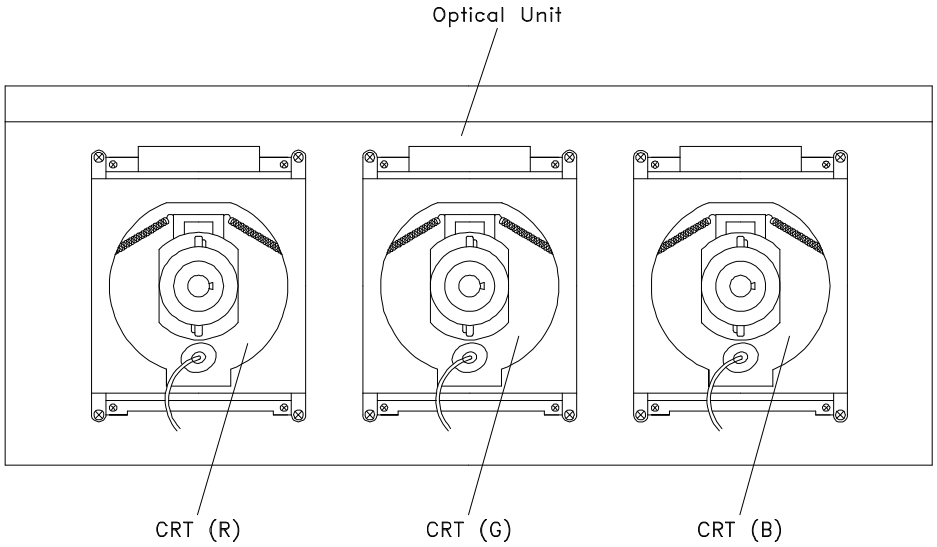

Figure 5-5

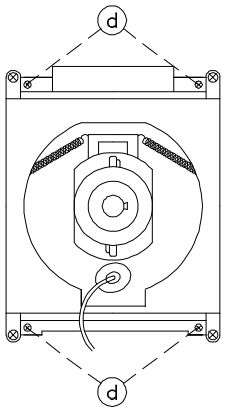

Figure 5-6

2. Install the Deflection Yoke on the CRT neck. [Figure 5-7]
3. Install the Lens that was removed in step 6 of Removal Of The CRT. [Figures 5-1 and 5-2]
   a) Position the Lens so that the Label faces the direction shown in Figure 5-8.
   b) Install the mounting screws. [Figure 5-1]
4. Connect the PCB-CRT.
5. Insert the Optical Unit into the Light Box Assembly.
6. Insert the Anode Lead Wire into the Flyback Transformer.
7. Re-clamp the Lead Wire in its original position.

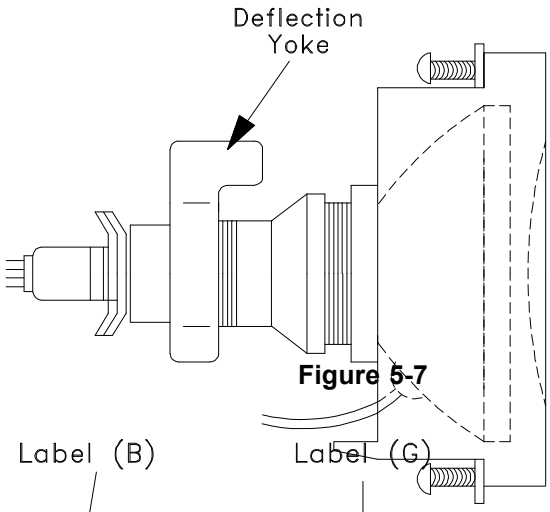

Figure 5-7

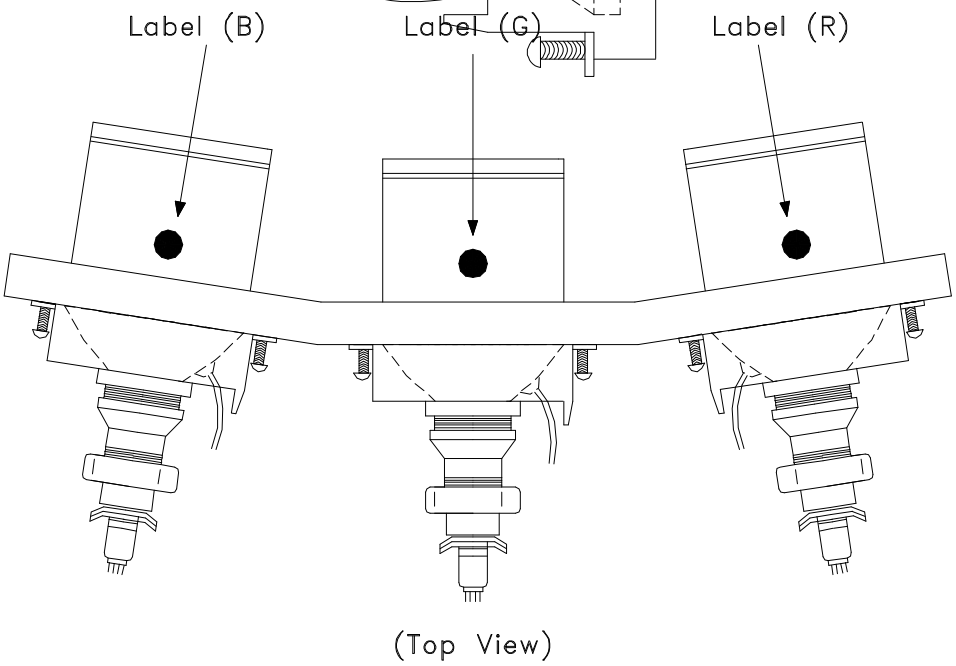

Figure 5-8

Adjustment procedures after replacing the CRT(s)

- CRT Cut Off / White Balance Adjustment
- Static Convergence Adjustment
- Dynamic Convergence Adjustment

ELECTRICAL ADJUSTMENTS

Note: Perform only the adjustments required.
Do not attempt an alignment if proper equipment is not available.

Test Equipment

- Oscilloscope (Unless otherwise specified, use 10:1 probes)
- Signal Generator (both SD and HD capable)
- Frequency Counter
- Direct Current Voltmeter
- Direct Current Power Supply
- Multiplex Audio Signal Generator
- Direct Current Ampere Meter

Test Signal

A. Monoscope Signal

Note: If you do not have a monoscope signal source, connect the unit to a VCR and play a Monoscope *alignment tape.
(* Part Number: 859C568060)

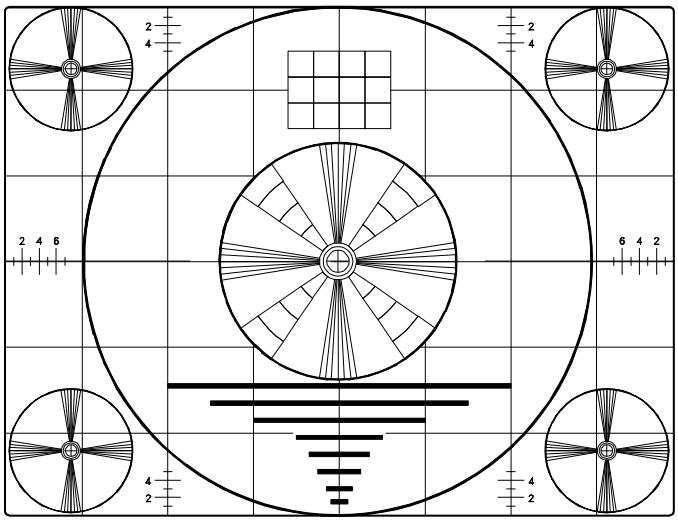

Monoscope Signal

B. Color Bar Signal

Use the color bar signal shown below, unless otherwise specified in this manual.

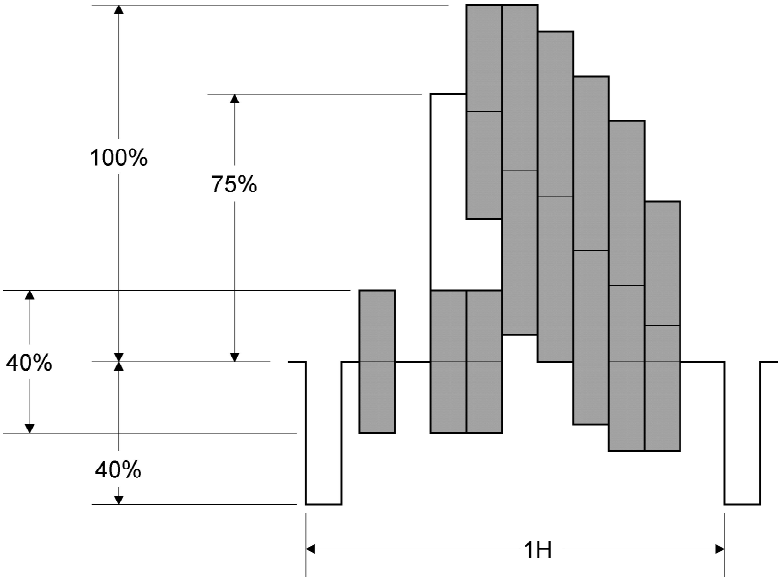

Split-Field Color Bars (100% window)

Initial Setup

A. Option Menu Setup

Follow the steps below for the initial set-up:

1. Select the "MENU" display by pressing the "MENU" button once.
2. Press the number buttons "0", "3", "7", "0" in sequence to select the "OPTION MENU" display.
3. Press the "ADJUST" button to select "INITIAL."
4. Press "ENTER."

NOTE: At this time channel 3 is automatically selected.

(MENU-0-3-7-0)	
OPTION MENU	
Initial	
Power restore	:OFF
DTV Port	:Auto

B. Default Settings

MAIN MENU DEFAULT SETTINGS

SETUP	
Edit Setup	
Review	
Antenna A	(▤) Enabled
Antenna B	(▤) Enabled
Input DTV	(▤) Enabled
Input 1	(▤) Enabled
Input 2	(▤) Enabled
Input 3	(▤) Enabled
Component 1	(▤) Enabled
Component 2	(▤) Enabled
Antenna DTV	(▤) Enabled
VGA	(▤) Enabled
MonLink	(▤) Enabled
Card 1	(▤) Enabled
Card 2	(▤) Enabled
Card 3	(▤) Enabled
Card 4	(▤) Enabled
Icon Position	As above
Ant-A, Ant-B, Ant-DTV, ComFlash MemStick, SmartMed, MMC& SD Input-1, Input-2, Input-3, Comp-1, Comp-2, Input DTV, VGA, MonLink, Cards 1…4	
Transport Menu	On
Energy Mode	Standard
Language	English
ANTENNA	
Antenna	ANT A
Memorize Channels	Air
Channel	Ch-3
Memory	Deleted

TIME	
Clock Setting	Manual
Time	12:00 AM
Day	Monday
CAPTIONS	
Analog Captions	With Mute
Background	Gray
Digital Captions	With Mute
Digital Settings	
Appearance	Default
Digital Channel Guide	Off
V-CHIP LOCK	
V-CHIP	Off
TV Rating	TV-PG
FV-Fantasy Violence	(▤) Enabled
D-Sexual Dialog	(▤) Enabled
L-Adult Language	(▤) Enabled
S-Sexual Situation	(▤) Enabled
V-Violence	(▤) Enabled
Program not Rated	(▤) Enabled
Movie Rating	PG
V-Chip Time	
Start Time	12:00 AM
Stop Time	12:00 AM
Lock By Time	
Lock by Time	Off
Lock Time	NA
Unlock Time	NA
Front Button Lock	Off
AUDIO/VIDEO SETTINGS	
A/V Memory Reset	Ant-A

Audio	
Volume	30%
Bass	50%
Treble	50%
Balance	50%
Surround	Off
Listen to	Stereo
Level Sound	On
TV Speakers	On
Audio 2 Out	Main
Video	
Contrast	100%
Brightness	50%
Sharpness	50%
Color	50%
Tint	50%
Color Temp.	High
Video Noise	Standard
Image Type	Video
VSM Sharpness	On
Video Mute	On
Black Enhancement	On
Advanced	
Color Balance	Manual
PerfectColor™	
A/V Memory for Ant-A	All Centered
PIP/POP	
Source	Ant A Ch 3
PIP Position	Lower Right
POP Position	Right Half
PIP/POP Format	Dble. Window
Format	Stretched

A/V RESET DEFAULT SETTINGS (By Input)

A/V Memory	Ant A/B	Ant DTV	Inp-DTV	INPUTS 1/2/3	Compon. 1/2	VGA	1394 1/2/3	MonLink	Card 1~4
Contrast	Max.	Max.	Max.	Max.	Max.	Max.	Max.	Max.	Max.
Brightness	Center	Center	Center	Center	Center	Center	Center	Center	Center
Sharpness	Center	Center	Center	Center	Center	N/A	Center	Center	Center
Color	Center	Center	Center	Center	Center	Center	Center	Center	Center
Tint	Center	Center	Center	Center	Center	Center	Center	Center	Center
Color Temp.	High	High	High	High	High	High	High	High	High
Video Noise	Standard	N/A	Standard	Standard	Standard	N/A	N/A	Standard	N/A
Image Type	Video	N/A	Video	Video	Video	N/A	N/A	Video	N/A
VSM Sharpness	On	On	On	On	On	On	On	On	On
Bass	Center	Center	Center	Center	Center	Center	Center	Center	Center
Treble	Center	Center	Center	Center	Center	Center	Center	Center	Center
Balance	Center	Center	Center	Center	Center	Center	Center	Center	Center
Surround	OFF	OFF	OFF	OFF	OFF	OFF	OFF	OFF	OFF
Listen To	Stereo	English	N/A	N/A	N/A	N/A	N/A	N/A	N/A
Level Sound	ON	ON	ON	ON	ON	ON	ON	ON	ON

C. A/V Memory

Each of the external inputs has its' own Audio/Video Memory. A change in an A/V setting at a specific input is stored in memory for that specific input.

A/V Reset

1. The front panel AV Reset button initializes all A/V Memories.
2. The AV Reset in the user's menu initializes only the selected input's A/V Memory.

LED Indicator Diagnostics

The "Power ON LED" provides an indication of the sets operation, and the possible cause of a malfunction.

1. Initial Control Circuitry Check

Immediately after the TV is connected to an AC power source:

LED Indications	Conditions	Probable Cause
Off	After AC is applied	No Standby Power or TV µPC not running
Fast Blink for 70 sec.	After AC is applied	Normal - DM µPC is booting up.
Fast Blink for 70 sec.	Each time TV is switched On	Power Save Mode is activated
Fast Blink (Doesn't stop)	After AC is applied	TV µPC is running, but DM failed to boot up
Slow Blink	Set is Off	Normal - Timer is set for Auto Trun On

2. Error Code Operational Check

Note: The TV must be in "Shut Down" and not heve been switched Off, to perform the Error Code Operational Check. When the TV is switched Off, the code automatically resets to "12" No Error.

Pressing the front panel "INPUT" and "MENU" buttons at the same time, and holding for 5 seconds, activates the Error Code Mode. The LED flashes denoting a two digit Error Code, or indicating no problem has occured since the last Initalization.

Note: The front panel buttons must used, NOT those on the Remote Control.

- The number of flashes indicates the value of the MSD (tens digit) of the Error Code.
- The flashing then pauses for approximately 1/2 second.
- The LED then flashes indicating the value of the LSD (ones digit) of the Error Code.
- The Error Code is repeated a total of 5 times.

  Example: If the Error Code is "23", the LED will flash two times, pause, and then flash three times.

3. Error Codes

The Error Code designations indicating malfunction, or no malfunction, are listed below:

Error Code	Probable Cause
12	No error detected
21	X-Ray Protect
22	Short Protect
23	Loss of Deflection

Remote Control Operational Modes

There are two Remote Hand Unit Operational Modes, "Standard" and "NetCommand™". The Remote is initially in the "Standard" mode. The "NetCommand™" mode is used when controlling Home Theater devices using NetCommand™. To change the Remote Operational Mode:

- Set the Remote to the TV Layer
- Point the Remote away from the TV.
- To change to "Netcommand™" ... Hold the "Power" button and press "9-3-5" in sequence.

- To change to “Standard” ... Hold the “Power” button and press “0-0-0” in sequence.

Circuit Adjustment Mode

Most of the adjustments can only be performed using the remote hand unit. Many of the adjustments must be performed in both the 480i and 1080i modes. Video/Color adjustments must be performed in the 480i and 1080i modes, and data must be preset in the 480P (DVD) and VGA modes.

Note: Set the Remote Operational Mode to “NetCommandTM”. (Hold the “Power” button and press “9-3-5” in sequence.) This slows the remote’s response and makes adjustments easier. When adjustments are complete, **set the Remote to its’ original Operational Mode.**
(Hold the “Power” button and press “0-0-0” in sequence)

A. Activating the Circuit Adjustment Mode

The current signal source determines if the activated Adjustment Mode is 480i or 1080i.

1. Select the signal source (480i or 1080i).
2. Press the "MENU" button on a remote hand unit.
3. Press the number buttons "0", "3", "5", "7" in sequence. The screen will change to the Adjustment Mode.

Note: Repeat steps 1 and 2 if the circuit adjustment mode does not appear on screen.

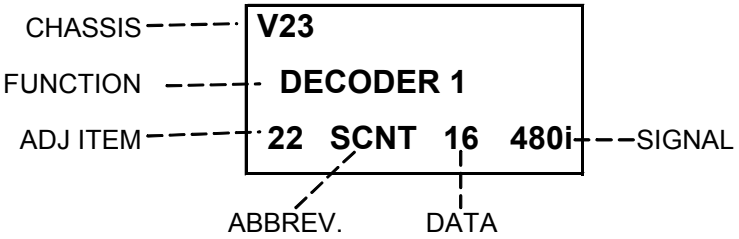

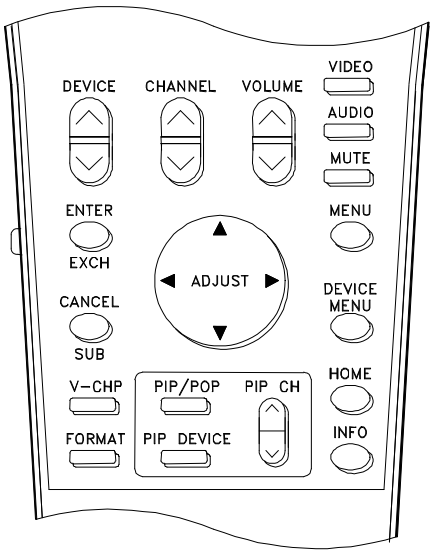

B. Selection of adjustment Functions and Adjustment Items

To select an adjustment item in the circuit adjustment mode, first select the adjustment function that includes the specific adjustment item to be selected. Then select the adjustment item. Refer to the following pages for the listing of adjustment functions and adjustment items.

1. Press the "AUDIO" button on a remote hand unit to select an adjustment function. Each time the button is pressed, the Function changes in the following sequence:

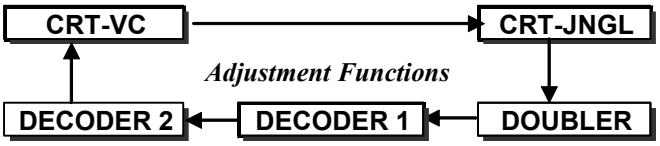

2. Press the “VIDEO” button to select a specific Adjustment Item. The Item number increases each time the “VIDEO” button is pressed.

C. Changing Data

After selecting an adjustment Item, use the “ADJUST UP/DOWN” buttons to change data.

- Press “ADJUST DOWN” to decrease the data value.
- Press “ADJUST UP” to increase the data value.

D. Saving Adjustment Data

Press “ENTER” to save adjustment data in memory. The character display turns red for approximately one second in this step.

Note: If the circuit adjustment mode is terminated without pressing “ENTER”, changes in adjustment data are not saved.

E. Terminating the Circuit Adjustment Mode

Press the “MENU” button on the remote hand unit twice to terminate the adjustment mode.

Note: The circuit adjustment mode can also be terminated by turning power OFF.

F. Toggle Between Reception Modes

Pressing “3” when in the Adjustment Mode CRT-VC Function toggles between 480i, 480p, 1080i and VGA. However data changes are not automatically saved. **Press “ENTER” to save data before pressing “3”**.

G. Service Mode Reset

To reset items in the Service Mode to their factory values:

1. Press MENU-0-3-5-7 to enter the Service Mode.
2. Press the “0,1,2,3,” insequence to Reset to the Factory settings.

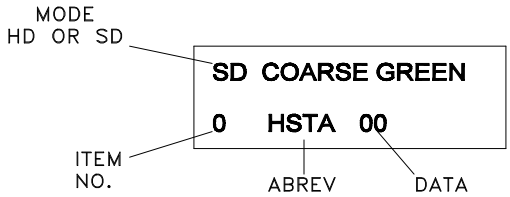

On Screen Display Position Adjustment Mode

Activation

1. Select 480i or 1080i source.
2. Press MENU-0-3-8-8

Convergence Adjustment Mode

The Convergence mode is used to perform raster geometry correction, and convergence adjustments. These adjustments must be made in both the SD (NTSC) and HD modes.

Note: Before activating the Convergence mode, turn “Video Mute” Off. The internal crosshatch pattern will not be displayed with “Video Mute” On, only a blue background is displayed.

A. Convergence Mode Activation

1. Press MENU-0-3-5-9
2. When the Convergence Mode is activated, this display appears on a Green Crosshatch.

B. Selecting the HD or SD Mode

1. **Select the Signal Source** before entering the Convergence Mode, either an NTSC or HD source.

2. **Enter the Convergence Mode**
   - If the signal source is NTSC, the SD mode is activated.
   - If the signal source is HD, the HD mode is activated.

3. **Activating the HD mode when no HD signal is available**
   - Press the “DEVICE” button.
   - Use the “UP-DOWN-RIGHT-LEFT” direction buttons to select the ANT-DTV, then press “ENTER”.
   - Press “MENU-0-3-9-5” in sequence to activate the Coarse Green HD Convergence mode.

C. Convergence Mode Functions

In the Convergence Mode there are three main Functions (Categories).

- Pressing “6” activates CONV MISC
- Pressing “5” activates COARSE CONV
- Pressing “4” activates FINE CONV

D. CONV MISC (Press 6)

This mode is used to preset data values controlling the Convergence Generator, and to perform the HV Regulation adjustment.

1. Use the VIDEO button to select an item.
2. Use the ADJUST buttons to change data.

NOTE: When Item "1 HVOL" is selected the screen goes black except for the data display. This occurs since a black screen is required when making the HV Regulation adjustment.

E. COARSE CONV (Press 5)

There are four Sub Functions in the Coarse mode, COARSE GREEN, COARSE RED, COARSE BLUE and DF.

- COARSE GREEN .... used to make Coarse Raster Geometry Adjustments.
- COARSE RED ... used to make Coarse Red Convergence Adjustments.
- COARSE BLUE ... used to make Coarse Blue Convergence Adjustments.
- DF ... used to preset data values controlling the Dynamic Beam Focus circuit drive signal.

1. Use AUDIO button to select a Sub Function
2. Use the VIDEO button to select an Adjustment Item.
3. Use the ADJUST buttons to change data.

F. FINE CONV (Press 4)

Sub Functions

This mode is used to perform Fine Raster Correction, and Fine Red and Blue Convergence Adjustments. There are three Sub Adjustment Functions, selected with the AUDIO button:

- FINE GREEN .... a Green Crosshatch is displayed, to make Fine Raster Corrections.
- FINE RED .... a White Crosshatch is displayed, to make Fine Red Convergence Adjustments.
- FINE BLUE .... a White Crosshatch is displayed, to make Fine Blue Convergence Adjustments.

Cursor

In the Fine mode a Cursor is added to the Crosshatch. The ENTER button toggles the Cursor between two modes:

- MOVE (blinking Cursor) .... use the ADJUST buttons to select any of 64 points on the Crosshatch.
- ADJUST (Non blinking Cursor) .... the ADJUST buttons adjust the active color at the current Cursor position, horizontally or vertically.

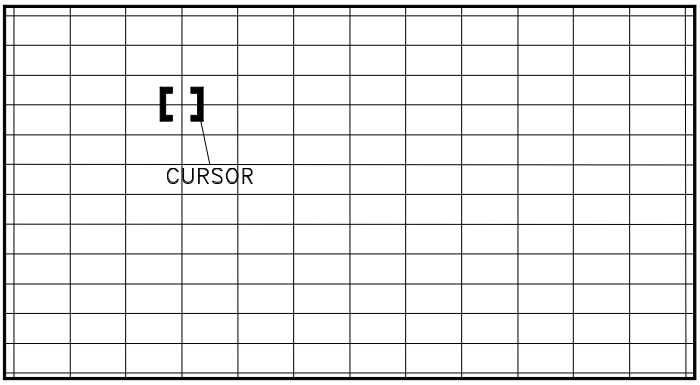

Display

The on-screen display changes in the Fine mode, as shown at the right. The display shows the vertical and horizontal data for the current Cursor Position, and the horizontal and vertical coordinates for that position.

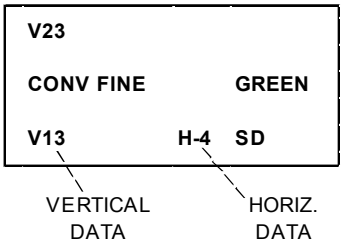

G. Saving Data and Exiting the Convergence Mode

Press MENU twice to exit the Convergence mode, data is automatically saved.

E2PROM Replacement

Data accessed in the Convergence Adjustment Mode is stored in IC8D01on the PCB-SIGNAL. Replacement PCB's are supplied pre-aligned so that only fine adjustments should be necessary after replacement. All other service data is stored on the PCB-E2P located on the DM assembly. When replacing the DM assembly, retaining the original PCB-E2P will eliminate the need for any realignment. The following tables are provided as a guide in case of total data loss.

List of Adjustment Items.

VC Function (Video Color)

IC2V01

Function Display		Adjustment	Data	Initial Data				Notes
NO.	Abbrev.	Description	Range	480i	480p	1080i	VGA	
1	SBRT	Sub Brightness Adjust	0~63	20	20	20	20	Black Level
2	SCT	Picture Gain Adjust	0~63	42	42	42	42	Sub Contrast
3	SCON	Sub Contrast Adjust	0~15	9	9	9	9	Preset
4	RDRH	R-Drive (high)	0~15	31	31	31	31	White Balance
5	GDRH	G-Drive (high)	0~15	42	42	42	42	"
6	BDRH	B-Drive (high)	0~63	40	40	40	40	White Balance
7	CTRH	R-Cutoff (high)	0~63	31	31	31	31	"
8	CTGH	G-Cutoff (high)	0~63	43	43	43	43	"
9	CTBH	B-Cutoff (high)	0~63	25	25	25	25	"
10	RDRL	R-Drive (low)	0~63	31	31	31	31	"
11	GDRL	G-Drive (low)	0~63	37	37	37	37	"
12	BDRL	B-Drive (low)	0~63	20	20	20	20	"
13	CTRL	R-Cutoff (low)	0~63	25	25	25	25	"
14	CTGL	G-Cutoff (low)	0~63	35	35	35	35	"
15	CTBL	B-Cutoff (low)	0~63	20	20	20	20	"
16	GMMA	RGB Gamma correction	0~3	2	2	2	2	"
17	GAML	Gamma Differ. Sw.	0~1	1	1	1	0	Preset
18	BRT	Brightness Control	0~63	21	21	21	21	User
19	COL	Color Control	0~63	36	40	36	30	User
20	TNT	Hue Control	0~63	32	31	31	31	User
22	CBOF	Cb sub signal DC cancel	0~63	31	31	31	31	Preset
23	CR0F	Cr sub signal DC cancel	0~63	31	31	31	31	"
38	DCTR	Y DC trans. Ration	0~3	2	2	2	2	"
56	ASBL	S-ABL gain setting	0~3	0	0	0	0	"

CRT-JNGL Function (Jungle)

Display		Adjustment Description	Data Range	WS-48513 WS-48613		WS-55513		WS-55613 WS-55813		WS-65513 WS-65613 WS-65713		WS-65813		WS-73513 WS-73713	
No.	Item			HD	SD	HD	SD	HD	SD	HD	SD	HD	SD	HD	SD
1	HWID	Horizontal Width	0~63	32	31	21	21	25	25	21	21	28	28	28	28
2	HKEY	Horizontal Keystone	0~63	43	37	44	40	41	37	25	24	25	24	25	24
7	VHGT	Vertical Height	0~63	27	30	21	25	28	31	33	38	38	41	33	41
8	VLIN	Vertical Linearity	0~15	6	6	6	6	6	6	6	6	6	6	6	6
9	VSCN	Vertical S-Correction	0~15	3	3	3	3	3	3	3	3	3	3	3	3
13	H-POS	Horizontal Position	0~63	38	23	38	23	38	23	38	23	38	23	38	23
18	V-POS	Vertical Position	0~63	31	31	31	31	31	31	31	31	31	31	31	31

DECODER-1 Function (Main Decoder)

Display		Adjustment	Data	YPbPr			3DYC
No.	Abbrev.	Description	Range	480i	480p	1080i	480i
22	SCNT	Main Y Out amplitude	0~31	16	16	16	14
24	SCLR	Main CbCr amplitude	0~31	16	16	16	13

DECODER-2 Function (Sub Decoder)

Display		Adjustment	Data	YPbPr			3DYC
No.	Abbrev.	Description	Range	480i	480p	1080i	480i
22	SCNT	Sub Y Out amplitude	0~31	12	12	12	12
24	SCLR	Sub CbCr amplitude	0~31	13	13	13	13

DOUBLER

Item	Abbrev.	Data
474	OFFT	31
475	OFF2	31

NOTE: These two adjustments position the picture on the screen when a MonitorLinkTM source is used.

OSD Horizontal Centering

(MENU-O-3-8-8)

Abbrev. Name	Description	Data
HR	Display horiz. Centering (NTSC)	120

DYNAMIC FOCUS

(MENU-0-3-5-9-5)

Item Number	Abbrev. Name	Description	Data SD&HD
1	DFH	Dynamic Focus Horizontal	-300
2	DFV	Dynamic Focus Vertical	-50

CONV MISC

(MENU-0-3-5-9-6)

Item Number	Abbrev. Name	Data SD	Data HD	Notes
1	HVOL	160		HV Adj.
5	STLN	45	27	
11	TPHS	40	38	
12	TPVD	23	42	

* Do not change "1 HVOL" if it has been previously set.

CONV GREEN Items

(MENU-0-3-5-9-5)

No.	Abbrev. Name	Description	WS-48513 WS-48613		WS-55513		WS-55613		WS-65513 WS-65613 WS-65713		WS-65813		WS-73513 WS-73713	
			SD	HD	SD	HD	SD	HD	SD	HD	SD	HD	SD	HD
1	HSTA*	Horizontal Position	0	0	0	0	0	0	0	0	0	0	0	0
2	VSTA*	Vertical Position	0	0	0	0	0	0	0	0	0	0	0	0
3	SKEW	Skew (Y axis rotation)	0	0	0	0	0	0	0	0	0	0	0	0
4	TILT	Tilt (X axis rotation)	0	0	0	0	0	0	0	0	0	0	0	0
5	HWID	Horisontal Width	20	20	20	20	20	20	20	20	20	20	20	20
6	HLIN	Horizontal Linearity	12	12	12	12	12	12	12	12	12	12	12	12
7	SPCC	Side Pin Cushion Correction	0	0	0	0	0	0	0	0	0	0	0	0
8	HKEY	Horizontal Keystone	0	0	0	0	0	0	0	0	0	0	0	0
9	TBPC	Top/Bottom PC Correction	-180	-150	-130	-150	-195	-180	-200	-170	-210	-180	-210	-180
10	VKEY	Vertical Keystone	0	0	0	0	0	0	0	0	0	0	0	0
11	VWID	Vertical Height	0	0	0	0	0	0	0	0	0	0	0	0
12	VLIN	Vertical Linearity.	0	0	0	0	0	0	0	0	0	0	0	0

***HSTA and VSTA must not exceed ±200**

CONV RED Items

(MENU-0-3-5-9-5)

No.	Abbrev. Name	Description	WS-48513 WS-48613		WS-55513		WS-55613		WS-65513 WS-65613 WS-65713		WS-65813		WS-73513 WS-73713	
			SD	HD	SD	HD	SD	HD	SD	HD	SD	HD	SD	HD
1	HSTA	Horizontal Position	50	50	50	50	50	50	50	50	100	100	10	100
2	VSTA	Vertical Position	0	0	0	0	0	0	0	0	0	0	0	0
3	SKEW	Skew (Y axis rotation)	0	0	0	0	0	0	0	0	0	0	0	0
4	TILT	Tilt (X axix rotation)	0	0	0	0	0	0	0	0	0	0	0	0
5	HLIN	Horixontal Linearity	-210	-190	-200	-170	-210	-150	-180	-160	-230	-210	-230	-210
6	HWID	Horizontal Width	0	0	0	0	10	10	0	0	0	0	0	0
7	VKEY	Vertical Keystone Correction	-140	-125	-115	-110	-100	-100	-100	-90	-170	-140	-140	-110
8	VWID	Vertical Height	0	0	0	0	0	0	0	0	0	0	0	0
9	VLIN	Vertical Linearity	0	0	0	0	0	0	0	0	0	0	0	0
10	TPPC	Top/Bottom PC Correction	20	20	20	20	20	20	20	20	20	20	20	20
11	SDBW	Horizontal Side Bow	30	30	30	30	30	30	30	30	30	30	30	30

***HSTA and VSTA must not exceed ±200**

CONV BLUE Items

(MENU-0-3-5-9-5)

No.	Abbrev. Name	Description	WS-48513 WS-48613		WS-55513		WS-55613		WS-65513 WS-65613 WS-65713		WS-65813		WS-73513 WS-73713	
			SD	HD	SD	HD	SD	HD	SD	HD	SD	HD	SD	HD
1	HSTA	Horizontal Position	-50	-50	-50	-50	-50	-50	-50	-50	-100	-100	-100	-100
2	VSTA	Vertical Position	0	0	0	0	0	0	0	0	0	0	0	0
3	SKEW	Skew (Y axis rotation)	0	0	0	0	0	0	0	0	0	0	0	0
4	TILT	Tilt (X axix rotation)	0	0	0	0	0	0	0	0	0	0	0	0
5	HLIN	Horixontal Linearity	210	190	180	180	180	180	180	160	250	220	230	200
6	HWID	Horizontal Width	0	0	0	0	0	0	0	0	0	0	0	0
7	VKEY	Vertical Keystone Correction	110	100	120	100	100	100	100	70	70	90	70	90
8	VWID	Vertical Height	0	0	0	0	0	0	0	0	0	0	0	0
9	VLIN	Vertical Linearity	0	0	0	0	0	0	0	0	0	0	0	0
10	TPPC	Top/Bottom PC Correction	-20	-20	-20	-20	-20	-20	-20	-20	-20	-20	-20	-20
11	HSBW	Horizontal Side Bow	-30	-30	-30	-30	-30	-30	-30	-30	-30	-30	-30	-30

***HSTA and VSTA must not exceed ±200**

Adjustment Test Point Location

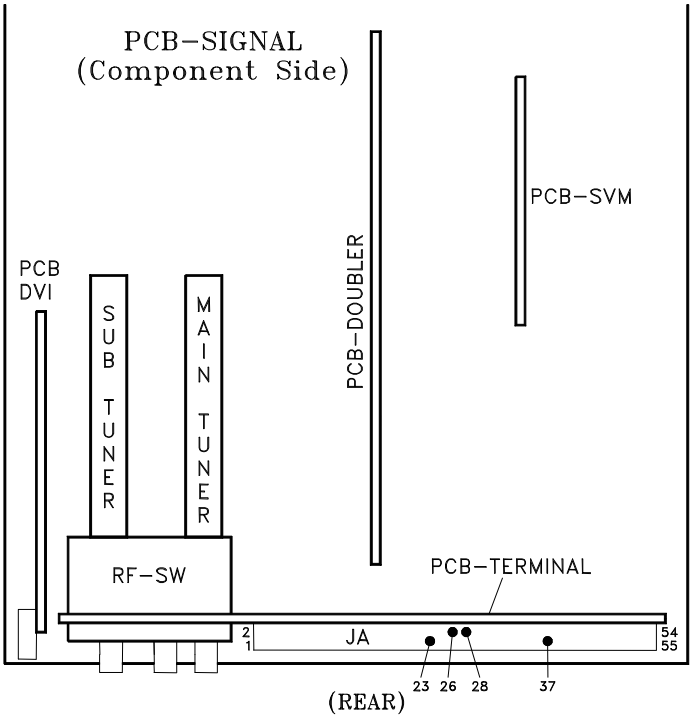

Test Points

DT pin 3 - HV Adjust
DT pin 6 - Ground
DT pin 7 - 12 Volts
DT pin 8 - ACL
JA pin 26 - Main Picture (Y)
JA pin 28 - Main Picture (Cr)
JA pin 35 - Sub Picture (Y)
JA pin 37 - Sub Pictur (Cr)
TP6(R, G or B) - CRT Cathode

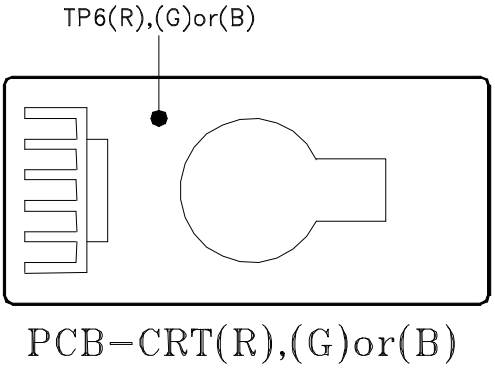

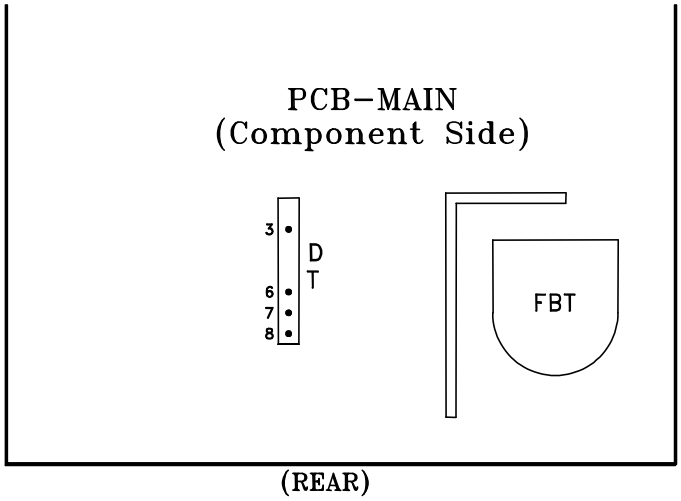

[HV Circuit]

1. HV Regulation

Purpose: To set the CRT Anode voltage.

Symptom: Dark Picture

Measuring Instrument	DC Voltmeter
Test Point	DT connector pins 3 & 6
Ext. Trigger	------
Measuring Range	-------
Input Signal	Video Signal Monoscope
Input Terminal	Video Input

Note: *This adjustment must be rechecked following Adjustment 9 CRT Cutoff.*

1. Supply a video monoscope signal.
2. Sent Contrast to maximum, and Brightness to mid position.
3. Connect a DC volt meter between pins 3 and 6 of the DT connector. (Positive lead to pin 3)
4. Activate the Conv-Misc Mode.
5. Select Item “1 HVOL” (screen goes black).
6. Adjust Item “1 HVOL” for 15.4V ±0.2V on the meter.
7. Save data and exit the Conv-Misc mode.
8. Confirm that the voltage does not change more than 0.15V.

Note: *This adjustment must be performed if E2RESET or Convergence E2RESET are activated.*

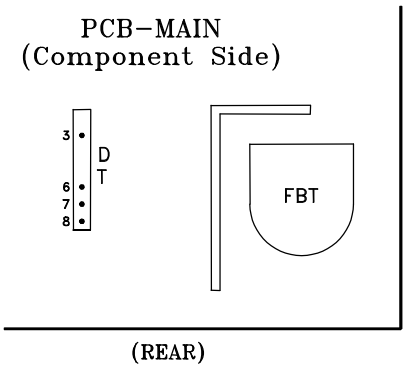

CONVERGENCE MODE

Activate ……..MENU-0-3-5-9
Misc. ……."6"
Coarse……..."5"
Fine ……..."4"
Color (R,G or B)……AUDIO
Item No……..VIDEO
Adjust/Move…….ADJUST
Cursor Toggle……ENTER
Save & Exit…..MENU (twice)

[Video Circuit]

2. Main/Sub Y Level

Purpose To set picture luminance

Symptom: Excess or insufficient brightness.

Measuring Instrument	Oscilloscope
Test Point	JA connector pins 26 &35
Ext. Trigger	------
Measuring Range	------
Input Signal	Color Bars
Input Terminal	Video Input

1. Supply a color bar signal to a Video Input (not an RF input).
2. Select the color bar signal for both the main and sub pictures.
3. Connect the oscilloscope to connector JA pin 26.
4. Activate the Adjustment Mode
5. Select Item “22 SCNT” in the MAIN MTRX function.
6. Adjust the data for 0.71 Vp-p max. - 0.66 Vp-p min. at EA pin 15. (If it cannot be adjusted within this range, set to the lower value)
7. Move the oscilloscope to JA pin 35.
8. Select Item “22 SCNT” in the SUB MTRX function.
9. Adjust the data to equal the MAIN-Y Gain (+0.0V -0.05V).

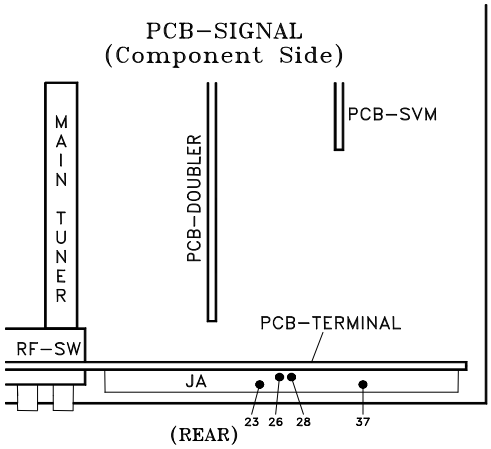

CIRCUIT ADJUST MODE

Activate …….. MENU-0-3-5-7
Function ……..……..AUDIO
Item No. ……..VIDEO
Adjust Data ……..ADJUST
Save Data …. ……ENTER
Exit ……..MENU (twice)

[Video Circuit]

3. Main/Sub Color Level

Purpose: To match the sub picture color to that of the main picture.

Symptom: Main and sub pictures colors differ.

Measuring Instrument	Oscilloscope
Test Point	JA pin 28 & JA pin 37 JB pin 5
Ext. Trigger	------
Measuring Range	------
Input Signal	Color Bars
Input Terminal	Video

1. Supply an NTSC signal to an External Video Input.
2. Select the NTSC signal as the source for both the main and sub pictures.
3. Connect an oscilloscope to connector JA pin 28 (Main Pr).
4. Activate the Adjustment mode.
5. Select Item “24 SCLR” in the Main Matrix Function.
6. Adjust data so the PR signal is 0.71 Vp-p max. - 0.66 Vp-p min
   (If it cannot be adjusted within this range, set to the lower value)
7. Connect an oscilloscope to connector JA pin 37 (Sub PR).
8. Select item “24 SCLR” in the Sub Matrix Function.
9. Adjust so Sub PR = Main PR.

CIRCUIT ADJUST MODE

Activate …….. MENU-0-3-5-7
Function …...……..AUDIO
Item No. ……..……VIDEO
Adjust Data ……..ADJUST
Save Data …. ……ENTER
Exit ……..MENU (twice)

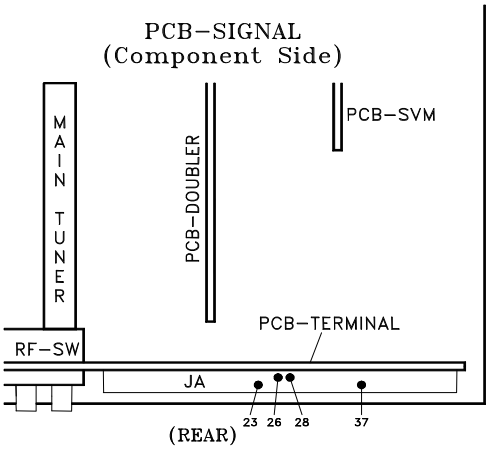

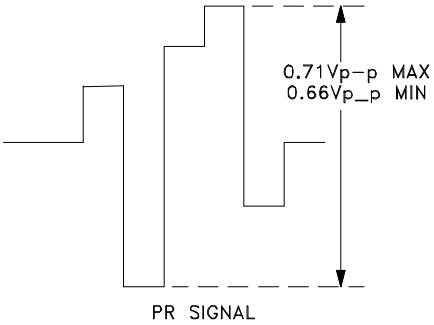

[CRT Circuit]

4. CRT Cutoff

Purpose To set the cutoff point for all three CRTs.

Symptom: Monochrome has a color tint, or incorrect brightness.

Measuring Instrument	Oscilloscope
Test Point	TP6R, TP6G, TP6B
Ext. Trigger	------
Measuring Range	50V/Div. 2msec/Div.
Input Signal	None
Input Terminal	Video Input

Note: ***Use the Expand mode (full screen)***

1. Select an External Input with no signal.
2. Enter the Adjustment Mode, VC Function.
3. Press “1”, automatically blanks the screen and sets COL to 0.
   Note: If the screen goes blue, turn off Video Mute.
4. Set the data to the values given in the table below.
5. Connect the oscilloscope to TP6R.
6. Adjust the Red Screen VR so the black level is 175V, as shown below, or 178V ±1VDC using an DC Voltmeter.
7. Repeat Steps 4 and 5 to set the Blue and Green Screen VRs, using TP6G and TP6B.

VC Function

Item	Abbr.	Setting
1	SBRT	24
2	SCT	42
3	SCON	9
4	RDRH	31
5	GDR	42
6	BDRH	40
7	CTRH	31
8	CTGH	43
9	CTBH	25

Note: *White Balance must be performed after this adjustment.*

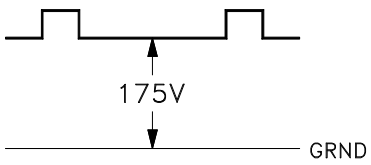

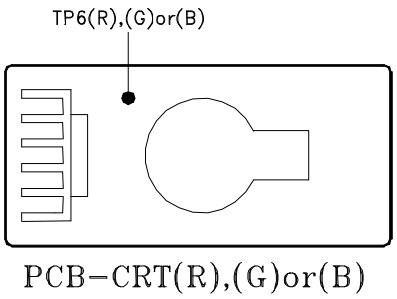

CIRCUIT ADJUST MODE

Activate …….. MENU-0-3-5-7
Function …...……..AUDIO
Item No. ……..……VIDEO
Adjust Data ……..ADJUST
Save Data …. ……ENTER
Exit ……..MENU (twice)

[CRT Circuit]

5. White Balance (NTSC)

Purpose: To set the CRTs white level in the NTSC mode.

Symptom: Monochrome has a color tint.

Measuring Instrument	DC ma meter
Test Point	------
Ext. Trigger	------
Measuring Range	------
Input Signal	NTSC White Raster
Input Terminal	RF or Video

Note: ***Use the "FORMAT" button to activate the Expand mode (full screen).***

1. Supply a full White Raster Signal
2. Activate the Service Mode, VC function.
3. Adjust Items "4 RDRH" and "6 BDRH" for optimum white at the center of the screen.
4. Reduce the input luminance level to 25%.
5. Adjust Items "7 CTRH" and "9 CTBH" for optimum white.
6. Insert a Milliammeter in series with each CRT Cathode. The maximum allowable current for each CRT is given in the table below.
7. Set the white raster to 100% and adjust Items "10 RDRL" and "12 BDRL" for optimum white at the center of the screen.
8. Reduce the luminance level to 25%.
9. Adjust Item "13 CTRL" and "15 CTBL" for optimum white.
10. Set the data for Item "19 COL" back to 31.

CIRCUIT ADJUST MODE

Activate …….. MENU-0-3-5-7
Function …...……..AUDIO
Item No. ……VIDEO
Adjust Data ……ADJUST
Save Data …. ……ENTER
Exit ……..MENU (twice)

Maximum CRT Current

CRT	WS-48513 WS-55613 WS-65613 WS-48613 WS-55813 WS-65713 WS-55513 WS-65513	WS-65813 WS-73513 WS-73713
RED	580ua	900ua
GREEN	580ua	900ua
BLUE	580ua	900ua

[CRT Circuit]

6. White Balance (HD)

Purpose To set the CRTs white level in the HD mode.

Symptom: Monchrome pictures have a color tint.

Measuring Instrument	-----
Test Point	-----
Ext. Trigger	------
Measuring Range	-----
Input Signal	HD White Raster
Input Terminal	DTV Inputs

1. Supply an HD Full White Raster signal to the DTV Inputs.
2. Select the DTV Inputs (Input button)
3. Activate the Adjustment mode, VC Function.
4. Set Item "19 COL" to 0.
5. Adjust Items "4 RDRH" and "6 BDRH" for optimum white at the center of the screen.
6. Reduce the input signal luminance to 25%.
7. Adjust Items "7 CTRH" and "9 CTBH" for optimum white.
8. Set the data for Item "19 COL" back to 31.

CIRCUIT ADJUST MODE

Activate …….. MENU-0-3-5-7
Function …...……..AUDIO
Item No. ……VIDEO
Adjust Data ……ADJUST
Save Data …. ……ENTER
Exit ……..MENU (twice)

[Video Circuit]

7. Black Level

Purpose: To set the black level of the picture.

Symptom: Excess or insufficient brightness.

Measuring Instrument	-----
Test Point	-----
Ext. Trigger	------
Measuring Range	------
Input Signal	Monoscope
Input Terminal	Video Input

1. Supply a Monoscope signal to a Video Input.
2. Activate the Adjust Mode, VC Function.
3. Adjust Item “2 SBRT” so the 0% and 10% black levels on the gradation scale are the same.
4. Press ENTER to save data.
7. Exit the Service Mode.

CIRCUIT ADJUST MODE

Activate …….. MENU-0-3-5-7
Function ……..……..AUDIO
Item No. ……VIDEO
Adjust Data ……..ADJUST
Save Data …. ……ENTER
Exit ……..MENU (twice)

40%	30%	20%	10%
50%	0%	0%	0%
60%	70%	80%	90%

GRADATION SCALE

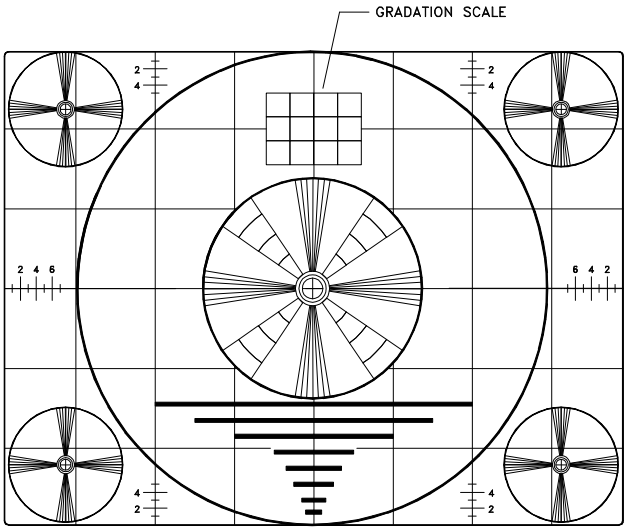

[Video Circuit]

8. Sub Contrast

Purpose To set overall beam current to its’ optimum level.

Symptom: Excess or insufficient contrast.

Measuring Instrument	DC ma meter
Test Point	DT connector pins 7 & 8
Ext. Trigger	------
Measuring Range	-----
Input Signal	Grayscale
Input Terminal	RF Input

Note: Activate the Expand mode (full screen).

1. Supply a Grayscale signal to a RF Input.
2. Activate the Adjust Mode, VC Function.
3. Select Item “1 SCT”, signal level automatically reduces.
4. Connect a 3ma DC meter between DT connector pins 7 and 8. Positive lead to pin 7.
5. Adjust Item “1 SCT” to the values given in the Table below.

MODEL	CURRENT
48 inch models	525 ±5ua
55 inch and 65 inch models	575 ±5ua
73 inch models	575 ±5ua

6. Remove the meter.
7. Save data and Exit the Service Mode.

CIRCUIT ADJUST MODE

Activate …….. MENU-0-3-5-7
Function ……..……..AUDIO
Item No. ……VIDEO
Adjust Data ……..ADJUST
Save Data …. ……ENTER
Exit ……..MENU (twice)

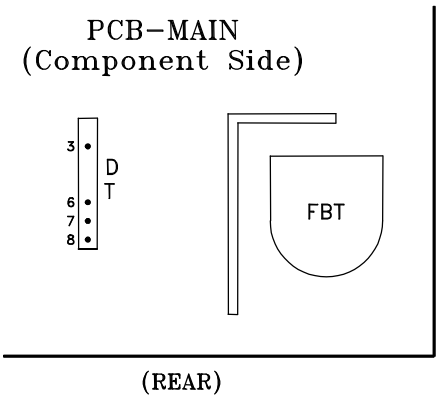

[Focus Circuit]

9. Dynamic Focus Preset

Purpose: To improve edge focus.

Symptom: Poor focus at the edges of the screen.

Measuring Instrument	-----
Test Point	-----
Ext. Trigger	------
Measuring Range	-----
Input Signal	Monoscope
Input Terminal	Video Input

1. Supply a Monoscope signal to a Video Input
2. Activate the Convergence Mode.
3. Select the DF Function under the Conv. Coarse Mode.
4. Set Items “0 DFH” and “1 DFV” to the data values given in the DF Table.
5. Press “6” to activate CONV-MISC
6. Set “0 FPHS” and “1 DPHS” to data values given in the CONV-MISC Table.
5. Exit the Conv. Mode.

CONVERGENCE MODE

Activate ……..MENU-0-3-5-9
Misc. ……."6"
Coarse……..."5"
Fine ……..."4"
Color (R,G or B)……AUDIO
Item No……..VIDEO
Adjust/Move…….ADJUST
Cursor Toggle……..ENTER
Save & Exit…..MENU (twice)

DF
(MENU-0-3-5-9-5)

Item	Abbr.	Data
1	DFH	-300
2	DFV	-50

CONV MISC
(MENU-0-3-5-9-6)

Item	Abbr.	Data
9	DPHS	0
10	DOFS	21

[Video Circuit]

10. Lens Focus

Purpose To set the Lens position for optimum focus.

Symptom: Poor focus

Measuring Instrument	-----
Test Point	------
Ext. Trigger	------
Measuring Range	-----
Input Signal	Monoscope
Input Terminal	Video Input

Note: *This adjustment must be done before Electrostatic Focus. Perform this adjustment for RED, GREEN, and BLUE monochrome pictures.*

1. Supply a VIDEO signal (Monoscope).
2. Cover the Red and Blue Lens (producing a green raster).
3. Adjust the Green Lens for best focus at the center of the Monoscope pattern.

Note: *Attach a white paper to the screen center. During adjustment, observe the picture on the screen from inside for easier adjustment.*

4. Repeat Steps 2 and 3 for the Red and Blue monochrome pictures.

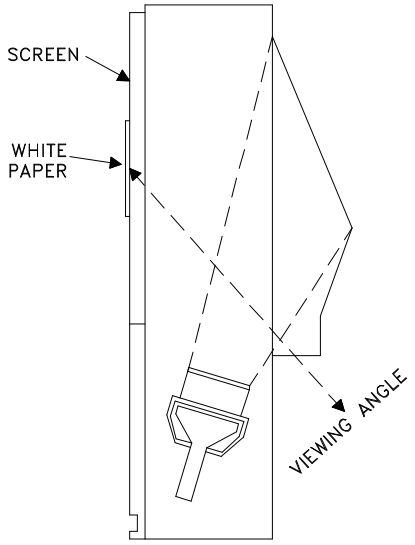

[CRT Circuit]

11. Electrostatic Focus & (Alignment Magnet)

Purpose: To set electrostatic focus to the optimum point.

Symptom: Poor focus.

Measuring Instrument	-----
Test Point	-----
Ext. Trigger	------
Measuring Range	------
Input Signal	Monscope & Crosshatch
Input Terminal	Video Input

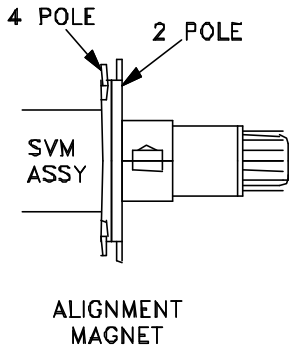

Note: *This adjustment must be performed after the Sub Contrast adjustment.*

Alignment Magnet Adjustment
(WS-48613 / 55613 / 55813 /65613 / 65713 / 65813 / 73713 Only)
This adjustment must be performed before Static Focus Adjustment

1. Supply a Crosshatch with Center Dot signal to a Video Input.
2. Set the display format to Standard (Format button)
3. Select a Green raster using the table below.
4. Roughly adjust Green Focus VR.
5. Rotate Green Focus VR CCW so the center dot is about 10mm diameter.
6. Adjust the Green 4 Pole Magnet for the roundest center dot.
7. Set the Green Focus VR for optimum focus.
8. Repeat the procedure with a Red raster and adjust the Red 4 Pole Magnet.
9. Use silicon to lock the magnets in place.

Static Focus Adjustment (All Models)

1. Supply a Monoscope signal to a Video Input
2. Activate A/V Reset
3. Select Red, Green or Blue rasters using the table below.
3. Set the Red, Green and Blue Focus VRs for optimum focus in the center of the picture.

Raster Color Selection

Color Raster	Activation Code
Red	MENU-0-3-5-9-1
Green	MENU-0-3-5-9-2
Blue	MENU-0-3-5-9-3

[On Screen Display]

12.Character Position

Purpose To position the character display horizontally.

Symptom: Incorrect display position

Measuring Instrument	-----
Test Point	-----
Ext. Trigger	------
Measuring Range	------
Input Signal	Video Signal (NTSC)
Input Terminal	ANT-A

1. Supply an NTSC signal to Ant-A and select Ant-A as the source.
2. Enter the OSD Position Mode, press “MENU-0-3-8-8”.
3. Adjust “OSDSD” to center the OSD horizontally.
4. Press “MENU” to save data and exit the mode.

[Conv/Defl]

13. Geometry Preset

Purpose: To preset data controlling raster geometry

Symptom: Raster distortion.

Measuring Instrument	-----
Test Point	------
Ext. Trigger	------
Measuring Range	-----
Input Signal	NTSC & HD
Input Terminal	Video & DTV Inputs

Procedure

In the Circuit Adjustment and Coarse Convergence Modes pre-set the data to the values given in the Tables below.

CRT-JUNGLE Function MENU-0-3-5-7

Display		WS-48513 WS-48613		WS-55513		WS-55613 WS-55813		WS-65513 WS-65613 WS-65713		WS-65813		WS-73513 WS-73713	
No.	Item	HD	SD	HD	SD	HD	SD	HD	SD	HD	SD	HD	SD
1	HWID	32	31	21	21	25	25	21	21	28	28	28	28
2	HKEY	43	37	44	40	41	37	25	24	25	24	25	24
7	VHGT	27	31	21	25	28	31	33	38	38	41	33	41
8	VLIN	6	6	6	6	6	6	6	6	6	6	6	6
9	VSCN	3	3	3	3	3	3	3	3	3	3	3	3
13	H-POS	38	23	38	23	38	23	38	23	38	23	38	23
18	V-POS	31	31	31	31	31	31	31	31	31	31	31	31

CONV GREEN Items (MENU-0-3-5-9-5)

No.	Abbrev. Name	WS-48513 WS-48613		WS-55513		WS-55613 WS-55813		WS-65513 WS-65613 WS-65713		WS-65813		WS-73513 WS-73713	
		SD	HD	SD	HD	SD	HD	SD	HD	SD	HD	SD	HD
1	HSTA*	0	0	0	0	0	0	0	0	0	0	0	0
2	VSTA*	0	0	0	0	0	0	0	0	0	0	0	0
3	SKEW	0	0	0	0	0	0	0	0	0	0	0	0
4	TILT	0	0	0	0	0	0	0	0	0	0	0	0
5	HWID	20	20	20	20	20	20	20	20	20	20	20	20
6	HLIN	12	12	12	12	12	12	12	12	12	12	12	12
7	SPCC	0	0	0	0	0	0	0	0	0	0	0	0
8	HKEY	0	0	0	0	0	0	0	0	0	0	0	0
9	TBPC	-180	-150	-180	-150	-195	-180	-200	-170	-210	-180	-210	-180
10	VKEY	0	0	0	0	0	0	0	0	0	0	0	0
11	VWID	0	0	0	0	0	0	0	0	0	0	0	0
12	VLIN	0	0	0	0	0	0	0	0	0	0	0	0

CONV RED Items (MENU-0-3-5-9-5)

No.	Abbrev. Name	WS-48513 WS-48613		WS-55513		WS-55613 WS-55813		WS-65513 WS-65613 WS-65713		WS-65813		WS-73513 WS-73713	
		SD	HD	SD	HD	SD	HD	SD	HD	SD	HD	SD	HD
1	HSTA	50	50	50	50	50	50	50	50	100	100	10	100
2	VSTA	0	0	0	0	0	0	0	0	0	0	0	0
3	SKEW	0	0	0	0	0	0	0	0	0	0	0	0
4	TILT	0	0	0	0	0	0	0	0	0	0	0	0
5	HLIN	-210	-190	-200	-170	-210	-150	-180	-160	-230	-210	-230	-210
6	HWID	0	0	0	0	10	10	0	0	0	0	0	0
7	VKEY	-140	-125	-115	-110	-100	-100	-100	-90	-170	-140	-140	-110
8	VWID	0	0	0	0	0	0	0	0	0	0	0	0
9	VLIN	0	0	0	0	0	0	0	0	0	0	0	0
10	TPPC	20	20	20	20	20	20	20	20	20	20	20	20
11	SDBW	30	30	30	30	30	30	30	30	30	30	30	30

CONV BLUE Items (MENU-0-3-5-9-5)

No.	Abbrev. Name	WS-48513 WS-48613		WS-55513		WS-55613 WS-55813		WS-65513 WS-65613 WS-65713		WS-65813		WS-73513 WS-73713	
		SD	HD	SD	HD	SD	HD	SD	HD	SD	HD	SD	HD
1	HSTA	-50	-50	-50	-50	-50	-50	-50	-50	-100	-100	-100	-100
2	VSTA	0	0	0	0	0	0	0	0	0	0	0	0
3	SKEW	0	0	0	0	0	0	0	0	0	0	0	0
4	TILT	0	0	0	0	0	0	0	0	0	0	0	0
5	HLIN	210	190	180	180	180	180	180	160	250	220	230	200
6	HWID	0	0	0	0	0	0	0	0	0	0	0	0
7	VKEY	110	100	120	100	100	100	100	70	70	90	70	90
8	VWID	0	0	0	0	0	0	0	0	0	0	0	0
9	VLIN	0	0	0	0	0	0	0	0	0	0	0	0
10	TPPC	-20	-20	-20	-20	-20	-20	-20	-20	-20	-20	-20	-20
11	HSBW	-30	-30	-30	-30	-30	-30	-30	-30	-30	-30	-30	-30

CIRCUIT ADJUST MODE

Activate MENU-0-3-5-7
Function .....AUDIO
Item No. .....VIDEO
Adjust Data .....ADJUST
Save Data ....ENTER
Exit .....MENU (twice)

CONVERGENCE MODE

Activate MENU-0-3-5-9
Misc. ....."6"
Coarse....."5"
Fine ....."4"
Color (R,G or B).....AUDIO
Item No.....VIDEO
Adjust/Move.....ADJUST
Cursor Toggle.....ENTER
Save & Exit.....MENU (twice)

[Deflection Circuit]

14: Deflection Geometry Height & Width Adjustment

Purpose: To set the height, width and linearity of the raster.

Symptom: Incorrect height, width and/or linearity.

Measuring Instrument	-----
Test Point	-----
Ext. Trigger	------
Measuring Range	-----
Input Signal	Monoscope (NTSC & HD)
Input Terminal	Video & DTV Inputs

Note:
Always use the *Standard Format* when aligning Geometry and Convergence.

Preliminary:
1. DO NOT change the initial values for "#8 VLIN" in the Defl. Jungle Function.
2. DO NOT exceed the following VHGT adjustment ranges:
   NTSC ... from -4 to +10
   HD ... from -10 TO +5

NTSC Mode
1. Supply an NTSC Monoscope signal to a Video Input.
2. Select the Monoscope as the signal source.
3. Activate the Adjustment Mode, JNGL Function.
4. Select and adjust each of the following items.
   - "7 VHGT" ... so the vertical marker sum = 4
   - "1 HWD" ... so the horizontal marker sum = 7
5. Save data and Exit the Service Mode.

CIRCUIT ADJUST MODE

Activate …….. MENU-0-3-5-7
Function ……..……..AUDIO
Item No. ……..VIDEO
Adjust Data ……..ADJUST
Save Data …. ……ENTER
Exit ……..MENU (twice)

HD Mode
1. Supply an HD Monoscope signal to the DTV HD Inputs.
2. Select the DTV Inputs as the signal source (Input button)
3. Activate the Service Mode, Defl. Jungle Function.
4. Select and adjust each of the following items.
   - "7 VHGT" ... so the vertical marker sum = 2
   - "1 HWD" ... so the horizontal marker sum = 5
5. Save data and Exit the Service Mode.

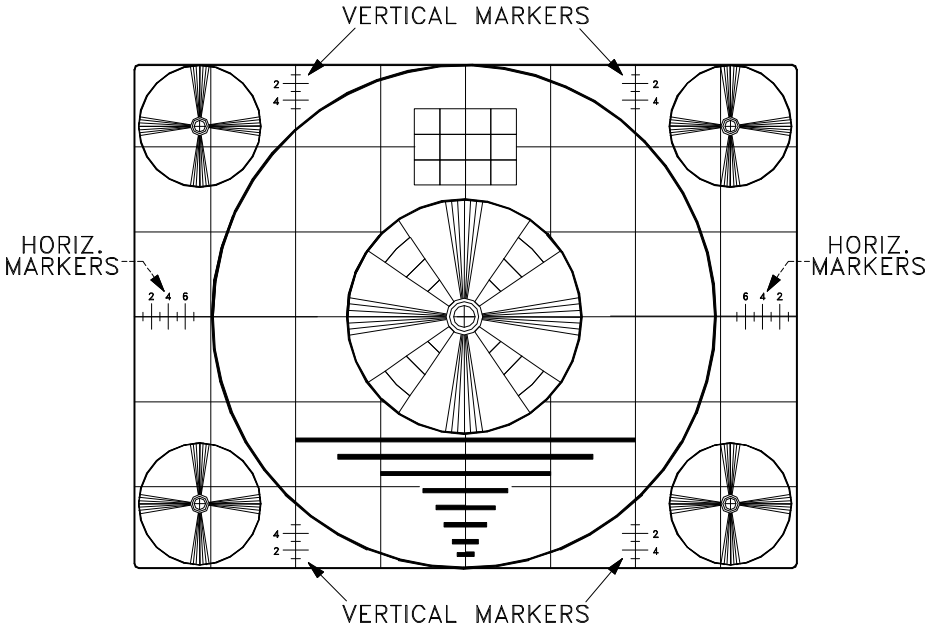

[Convergence Circuit]

15. Convergence Geometry Adjustment

Purpose: To set the Convergence circuit geometry adjustments.

Symptom: Raster distortion at the top, bottom or sides of the picture.

Measuring Instrument	-----
Test Point	------
Ext. Trigger	------
Measuring Range	-----
Input Signal	NTSC -- None HD -- HD sync
Input Terminal	Video & DTV Inputs

Note: *Deflection Circuit Geometry must be performed before this adjustment.*

Note:
Always use the *Standard Format* when aligning Geometry and Convergence.

NTSC mode

1. Select a Video Input with no signal.
2. Activate the Convergence Mode, Coarse Green.
3. Adjust the Coarse Green Items shown below for straight crosshatch lines.
4. Select the Fine Green Mode, a Cursor is displayed on the crosshatch.
5. Use the Cursor to adjust for straight crosshatch lines.
6. Exit the Convergence Mode.

HD mode

1. Supply horizontal and vertical HD sync to the DTV Inputs and select the DTV Inputs as the source.
   Note: I*f an HD signal is not available, select Ant-DTV, with no signal, as the source.*
2. Enter the Convergence Mode, Coarse Green.
3. Repeat NTSC Steps 3 through 6 in the HD mode.

CONVERGENCE MODE

Activate MENU-0-3-5-9
Misc. ....."6"
Coarse......"5"
Fine ....."4"
Color (R,G or B).....AUDIO
Item No.....VIDEO
Adjust/Move.....ADJUST
Cursor Toggle.....ENTER
Save & Exit.....MENU (twice)

COARSE GREEN ADJUSTMENTS

3 SKEW

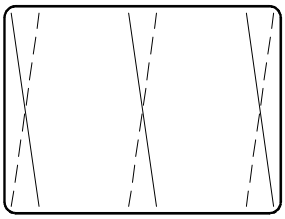

4 TILT

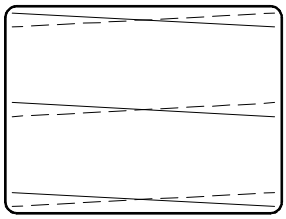

6 HLIN

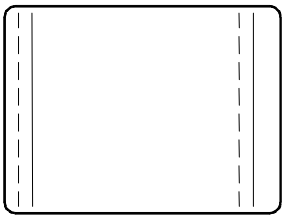

7 SPCC

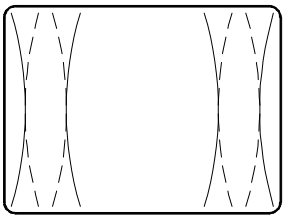

8 HKEY

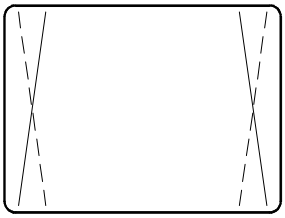

9 TBPC

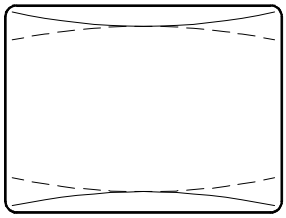

10 VKEY

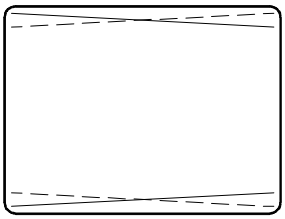

12 VLIN

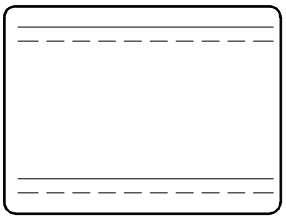

[Convergence Circuit]

16. Centering and Static Convergence

Purpose: To converge red, green and blue at the center of the screen

Symptom: Color edging over the entire picture.

Measuring Instrument	-----
Test Point	-----
Ext. Trigger	------
Measuring Range	-----
Input Signal	NTSC -- Monoscope HD -- Monoscope
Input Terminal	Video & DTV Inputs

Preliminary
Degauss the shield cover and bracket unit of the CRT assembly and chassis.
DO NOT degauss the CPM Assemblies.

CAUTION: On models WS-48613, WS-55613, WS-65613, WS-65713, WS-65813 and WS-73713, **Do Not** adjust the Alignment Magnets instead of the Centering Magnets.

NOTE: Confirm that Item #13 HPOS, in the CRT-DEFL function of the MENU-0-3-5-7 Adjustment mode is set to the following values:
HD=38
SD=23

HD mode (The following steps must be performed in the HD mode)

1. Supply an HD Monoscope signal to the DTV Inputs.
2. Select the DTV Inputs as the signal source (Input button).
3. Enter the Convergence Coarse mode.
4. Set the data for the "HSTA" and "VSTA" items to:

GREEN	RED	BLUE
HSTS = 0	HSTA = 50	HSTA = -50
VSTA = 0	VSTA = 0	VSTA = 0

5. In the Coarse Green mode:
   - Center the Green Raster using the Green Centering Magnet.
   - Rotate the Green Deflection Yoke to correct any tilt.
6. In the Coarse Red mode, use the Red Centering Magnet to converge red on the green at the center of screen. Correct any red tilt with the Red Deflection Yoke.
7. In the Coarse Blue mode, repeat Step 6 using the Blue Centering magnet and the Blue Deflection Yoke.
8. Exit the Convergence mode.

CONVERGENCE MODE

Activate ……..MENU-0-3-5-9
Misc. ……."6"
Coarse……..…."5"
Fine ……..."4"
Color (R,G or B)……AUDIO
Item No……..VIDEO
Adjust/Move…….ADJUST
Cursor Toggle……ENTER
Save & Exit…..MENU (twice)

SD mode

1. Supply an NTSC Monoscope signal to a Video Input.
2. Select the Monoscope as the signal source (Input button).
3. Enter the Convergence Coarse Green mode.
4. Confirm that the Green Raster is centered.

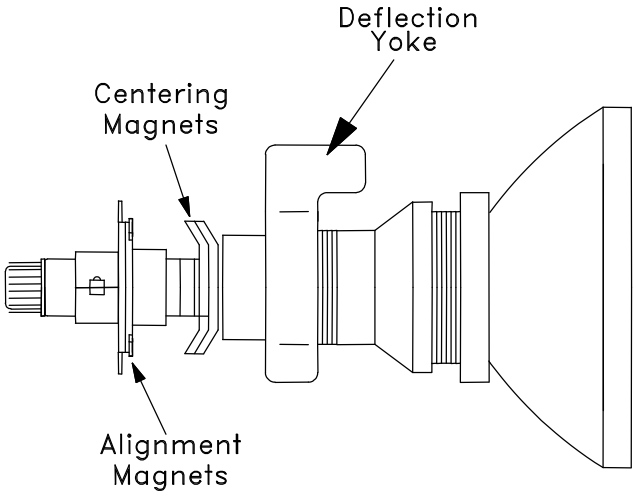

[Convergence Circuit]

17. Coarse Convergence

Purpose: To converge red and blue on green at the edges of the screen.

Symptom: Color edging at the top, bottom and sides of the screen.

Measuring Instrument	-----
Test Point	------
Ext. Trigger	------
Measuring Range	-----
Input Signal	NTSC -- None HD -- HD sync
Input Terminal	Video & HD Inputs

Note:
Always use the *Standard Format* when aligning Geometry and Convergence.

SD mode

1. Select an External Input with no signal.
2. Activate the Convergence Mode, Coarse Red.
3. Adjust the Items shown below to converge the red on the green.
4. Select Coarse Blue mode.
5. Adjust the Items shown below to converge the blue on the green.
   Note: *If center convergence shifts, use red and blue Items "0 HSTA" and "1 VSTA" to correct the shift.*
6. Exit the Convergence Mode.

HD mode

1. Supply horizontal and vertical HD sync to the DTV Inputs and select the DTV Inputs as the source.
   Note: I*f an HD signal is not available, select Ant-DTV, with no signal, as the source.*
2. Repeat SD Steps 2 through 5 in the HD mode.
3. Exit the Convergence mode.

CONVERGENCE MODE

Activate ……..MENU-0-3-5-9
Misc. ……."6"
Coarse……..…."5"
Fine ……..."4"
Color (R,G or B)……AUDIO
Item No……..VIDEO
Adjust/Move…….ADJUST
Cursor Toggle……ENTER
Save & Exit…..MENU (twice)

COARSE CONVERGENC RED & BLUE ADJUSTMENTS

1 HSTA*

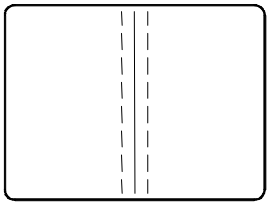

2 VSTA*

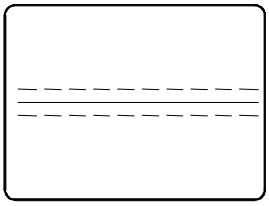

3 SKEW

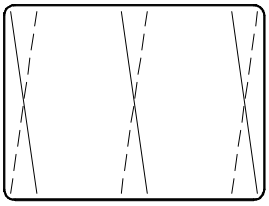

4 TILT

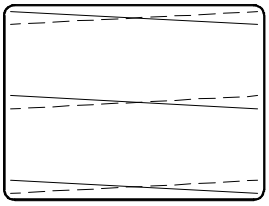

5 HLIN

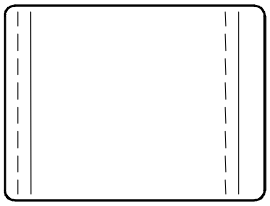

6 HWID

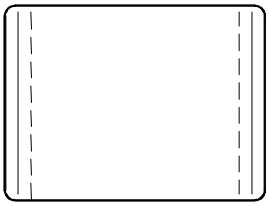

7 VKEY

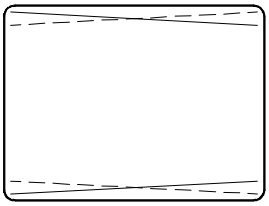

8 VWID

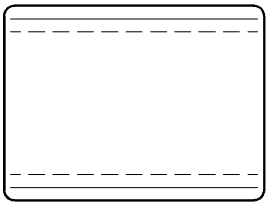

9 VLIN

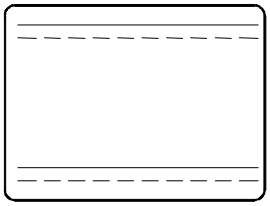

10 TBPC

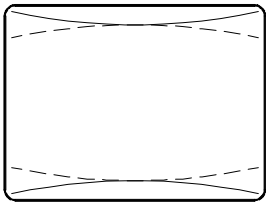

11 HSBW

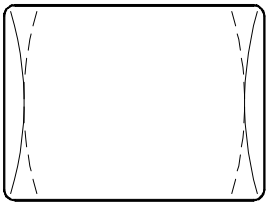

* Data should not exceed ±100

[Convergence Circuit]

18. Fine Convergence

Purpose: To converge red, green and blue at the edges of the screen

Symptom: Color edging at the edges of the picture.

Measuring Instrument	-----
Test Point	-----
Ext. Trigger	------
Measuring Range	-----
Input Signal	NTSC -- None HD -- HD sync
Input Terminal	Video & DTV Inputs

Note:
Always use the *Standard Format* when aligning Geometry and Convergence.

SD Fine Adjustment

1. Select an External Input, no signal.
2. Activate the Convergence Mode, Fine Red.
3. Use the Cursor to converge red on the green.
4. Select the Fine Blue mode.
5. Use the Cursor to converge blue on the green.
6. Exit the Convergence mode.

HD Fine Adjustment

1. Supply an HD signal (sync only) to the DTV inputs and select DTV with the "Audio" button.
   Note: I*f an HD signal is not available, select Ant-DTV, with no signal, as the source.*
2. Repeat SD Fine Adjustment Steps 2 through 6, in the HD mode.

CONVERGENCE MODE

Activate ……..MENU-0-3-5-9
Misc. ……."6"
Coarse……."5"
Fine ……..."4"
Color (R,G or B)……AUDIO
Item No……..VIDEO
Adjust/Move…….ADJUST
Cursor Toggle……ENTER
Save & Exit…..MENU (twice)

CHIP PARTS REPLACEMENT

Some resistors, shorting jumpers (0 Ohm resistors), ceramic capacitors, transistors and diodes are chip parts. The following precautions should be taken when replacing these parts.

Cautions:

1. Use a fine tipped, well insulated soldering iron (approximately 30 watts), and tweezers.
2. Melt the solder and remove the chip parts carefully so as not to tear the copper foil from the printed circuit board.
3. Discard removed chips; do not reuse them.
4. Do not apply heat for more than 3 (three) seconds to new chip parts.
5. Avoid using a rubbing stroke when soldering.
6. Take care not to scratch, or damage the chip parts when soldering.
7. Supplementary cementing is not required.

Chip Parts Removal (Resistors, Capacitors, etc.)

1. Grasp the part with tweezers. Melt the solder at both sides alternately, and remove one side of the part with a twisting motion.
2. Melt the solder at the other side and remove the part.

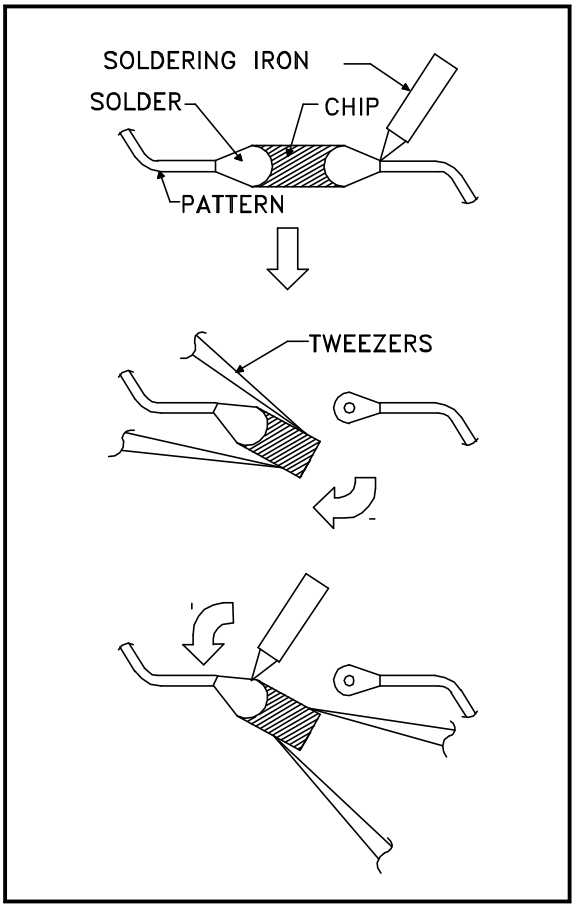

Chip Parts Removal (Transistors)

1. Melt the solder of one lead and lift the side of that lead upward.
2. Simultaneously melt the solder of the other two leads and lift the part from the PCB.

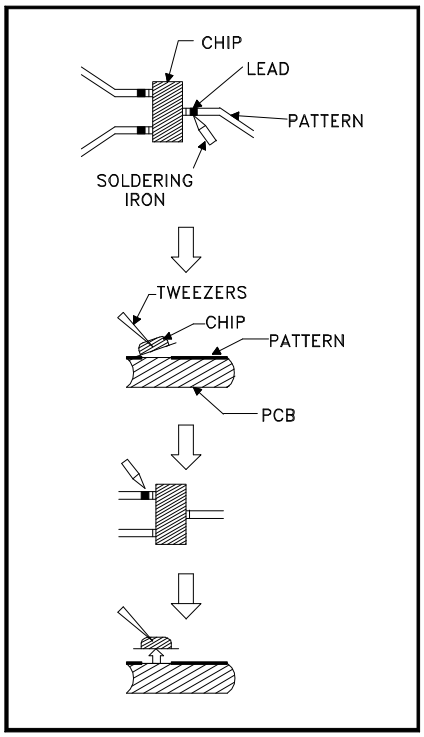

Replacement

1. Presolder the contact points on the circuit pattern.
2. Press the part downward with tweezers and apply the soldering iron as shown.

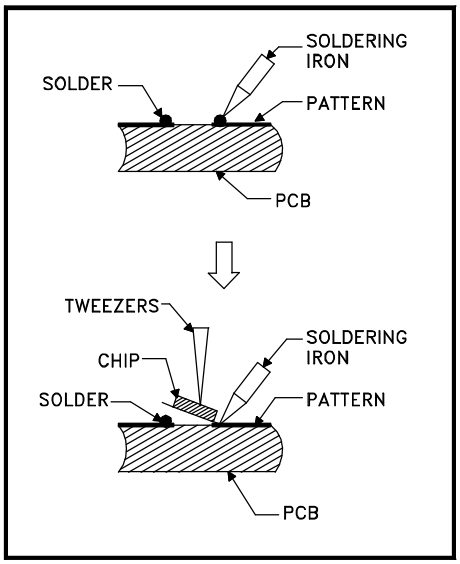

REPLACEMENT PARTS

Parts Ordering

To expedite delivery of replacement parts orders, specify the following:

1. Model Number/Serial Number
2. Part Number and description
3. Quantity

Note: Unless complete information is supplied, delay in processing of orders will result.

Critical and Warranty Parts Designation

Critical Electrical Components are indicated by **Bold Type** in the Parts List, and in the parts data base.

Warranty Return Parts are indicated in the Parts List with an **(*)**.

Parts Tolerance Codes

Refer to the following chart for tolerance characteristics of electrical components.

MARK	B	C	D	F	G	J	K
Tolerance %	± 0.1	± 0.25	± 0.5	± 1	± 2	± 5	± 10

MARK	M	N	V	X	Z	P	Q
Tolerance %	± 20	± 30	± 10	+ 40 -20	+ 80 -20	+ 100 - 0	+ 30 -10

MARK	M	N	V	X	Z
Tolerance (pF)	± 0.1	± 0.25	± 0.5	± 1	± 2

QUICK REFERENCE FOR COMMON REPLACEMENT PARTS

CRT ASSEMBLIES

MODEL	ASSY-CRT-RED	ASSY-CRT-GREEN	ASSY-CRT-BLUE
WS-48513	251C224010	251C224020	251C224030
WS-48613	"	"	"
WS-55513	251C224040	251C224050	251C224060
WS-55613	251C224070	251C224080	251C224090
WS-55813	251C225010	251C225020	251C225030
WS-65513	251C225040	251C225050	251C225060
WS-65613	"	"	"
WS-65713	251C225070	251C225080	251C225090
WS-65813	251C226010	251C226020	251C226030
WS-73513	251C226040	251C226050	251C226060
WS-73713	"	"	"

REMOTE CONTROL

	290P117010	REMOTE CONTROL

HIGH VOLTAGE / DEFLECTION COMPONENTS

Q5A31	**261P071010**	**HORIZ-OUT 2SC5778**	
Q5A51	**261P082010**	**HV-OUT 2SK2771-O1R**	
T5A51	**334P281010**	**TRANS-FLYBACK**	
	129P059050	VR-FOCUS	
	338P054030	SVM COIL	WS-48513 / WS-55515 / WS-65513
	338P054040	SVM COIL	WS-48613 / WS-55613 / WS-55813 / WS-65613 WS-65713 / WS-65813 / WS-73513 / WS-73713
	330P294010	**DEFL-YOKE**	**WS-48513 WS-48613 / WS-55513**
	330P294020	**DEFL-YOKE**	**WS-55613 / WS-55813 / WS-65513 / WS-65613 WS-65713 / WS-65813 / WS-73513 / WS-73713**
	453B036010	**CAP-ANODE-LONG-RED**	**WS-48513 / WS-48613 / WS-55513 / WS-55613 / WS-55813 / WS-65513 / WS-65613 / WS-65713**
	453B036020	**CAP ANODE-LONG-G&B**	**“ “ “ “ “ “**
	453B036070	**CAP-ANODE-SHORT-RED**	**WS-65813 / WS-73513 / WS-73713**
	453B036080	**CAP ANODE-LONG-G&B**	**“ “ “ “**

MISCELLANEOUS

MODEL	MIRROR	LENTICULAR SCREEN	FRESNEL LENS
WS-48512	767D072040	491P138020	491P139020
WS-48613	"	"	"
WS-55513	767D072050	491P125030	491P126020
WS-55613	767D072030	"	"
WS-55813	767D072060	491P162010	491P163010
WS-65513	767D048090	491P145020	491P146020
WS-65613	"	"	"
WS-65713	"	"	"
WS-65813	"	491P164010	491P165010
WS-73513	767C031020	491P085030	491P086030
WS-73713	"	"	"

[#] Model Legend:

(a) WS-48513, (b) WS-48613, (c) WS-55513, (d) WS-55613, (e) WS-55813, (f) WS-65513, (g) WS-65613, (h) WS-65713, (i) WS-65813, (j) WS-73513, (k) WS-73713

Ref #	Part #	Part Name & Description	[#]
		TUBES	
	251C224010	**ASSY-CRT-RED**	**ab**
	251C224020	**ASSY-CRT-GREEN**	**ab**
	251C224030	**ASSY-CRT-BLUE**	**ab**
	251C224040	**ASSY-CRT-RED**	**c**
	251C224050	**ASSY-CRT-GREEN**	**c**
	251C224060	**ASSY-CRT-BLUE**	**c**
	251C224070	**ASSY-CRT-RED**	**d**
	251C224080	**ASSY-CRT-GREEN**	**d**
	251C224090	**ASSY-CRT-BLUE**	**d**
	251C225010	**ASSY-CRT-RED**	**e**
	251C225020	**ASSY-CRT-GREEN**	**e**
	251C225030	**ASSY-CRT-BLUE**	**e**
	251C225040	**ASSY-CRT-RED**	**fg**
	251C225050	**ASSY-CRT-GREEN**	**fg**
	251C225060	**ASSY-CRT-BLUE**	**fg**
	251C225070	**ASSY-CRT-RED**	**h**
	251C225080	**ASSY-CRT-GREEN**	**h**
	251C225090	**ASSY-CRT-BLUE**	**h**
	251C226010	**ASSY-CRT-RED**	**i**
	251C226020	**ASSY-CRT-GREEN**	**i**
	251C226030	**ASSY-CRT-BLUE**	**i**
	251C226040	**ASSY-CRT-RED**	**jk**
	251C226050	**ASSY-CRT-GREEN**	**jk**
	251C226060	**ASSY-CRT-BLUE**	**jk**
		INTEGRATED CIRCUITS	
IC2A00	275P937010	IC-C-MOS - MM1519XQ	
IC2A95	270P994010	IC - MAX4550CAI	
IC2B00	275P937010	IC-C-MOS - MM1519XQ	
IC2C00	275P989010	IC-C-MOS - MAX3223ECAP	
IC2D00	270P974010	IC-C-MOS - SII907B	
IC2D01	275P981010	IC-C-MOS - 24LCS22AT/SN	
IC2D02	261P135010	FET-HEX - IRF7313	
IC2D03	270P677010	IC - BA033FP	
IC2E00	275P947010	IC-C-MOS - UPD64083	
IC2E20	272P379020	IC - LM1881MX (NSC)	
IC2E65	270P992020	IC - BA25BC0FP	
IC2F00	276P021010	IC-C-MOS - TA1340AF	
IC2F10	270P677020	IC - BA05FP	
IC2G00	276P021010	IC-C-MOS - TA1340AF	
IC2H01	275P937010	IC-C-MOS - MM1519XQ	
IC2K00	270P623010	IC - CXA2069Q	
IC2L00	270P623010	IC - CXA2069Q	
IC2S01	271P004010	IC - CM1208-08MS	
IC2V01	275P733010	IC-C-MOS - CXA2150AQ	
IC2V02	275P419010	IC-C-MOS - SN74AHCT1G126DBV	
IC2V03	275P419010	IC-C-MOS - SN74AHCT1G126DBV	
IC2X10	275P419010	IC-C-MOS - SN74AHCT1G126DBV	
IC2X11	275P419010	IC-C-MOS - SN74AHCT1G126DBV	
IC2X15	276P020010	IC-C-MOS - SN74LVC2G14DBVR	
IC3A01	275P731020	IC-C-MOS - MSP3445G-QI-B8-V3	
IC3E01	**270P750010**	**IC - LA4663**	
IC4B01	**270P261020**	**IC - TDA8177**	
IC5103	275P679010	IC-C-MOS - TC74LCX74FT	
IC5200	270P677030	IC - BAO9FP	

Ref #	Part #	Part Name & Description	[#]
IC5251	270P988010	IC-OP AMP - LM358M	
IC5252	270P877010	IC - UPC3217GV	
IC5253	270P877010	IC - UPC3217GV	
IC52A0	275P715020	IC-C-MOS - BCM3510KPF P22	
IC52A1	275P662020	IC-C-MOS - CY7C1019CV33-15VC	
IC52A2	270P806030	IC - SI-3018LSA	
IC53A0	275P888010	IC-C-MOS - MT48LC16M16A2TG-75	ehik
IC53A1	275P888010	IC-C-MOS - MT48LC16M16A2TG-75	ehik
IC53A3	275P888010	IC-C-MOS - MT48LC16M16A2TG-75	
IC5409	275P464010	IC-C-MOS - TC7WH14FK	
IC54K2	270P880010	IC - 24LC64I/SN	
IC54K3	270P880010	IC - 24LC64I/SN	
IC54K7	270P880010	IC - 24LC64I/SN	
IC54Z1	275P657050	IC-C-MOS - 24LC256T-I/SN	
IC54Z3	275P657050	IC-C-MOS - 24LC256T-I/SN	
IC54Z4	270P880010	IC - 24LC64I/SN	
IC55A6	275P741020	IC-C-MOS - MT48LC8M16A2TG-75	
IC55A7	275P741020	IC-C-MOS - MT48LC8M16A2TG-75	
IC55A8	275P741020	IC-C-MOS - MT48LC8M16A2TG-75	
IC55E1	275P464010	IC-C-MOS - TC7WH14FK	
IC5602	279P069030	IC - SN74LVTH244APW	
IC5A00	**267P163010**	**HIC - MSPAD401**	
IC5A01	272P237010	IC - LA6324N	
IC5A02	266P727040	IC - UPC339C/LM339N	
IC5A03	**270P704010**	**IC - LM4040BIZ-10.0**	
IC6B01	**270P667010**	**IC - TDA6120Q**	
IC6G01	**270P667010**	**IC - TDA6120Q**	
IC6R01	**270P667010**	**IC - TDA6120Q**	
IC7000	275P943060	IC-C-MOS - PIC18F252	
IC7001	271P023010	IC - SN74CBTD1G125DBVR	
IC7002	271P023010	IC - SN74CBTD1G125DBVR	
IC7003	271P023010	IC - SN74CBTD1G125DBVR	
IC7A00	**275P942020**	**IC-C-MOS - M306V3MG-803FP**	
IC7B00	271P023010	IC - SN74CBTD1G125DBVR	
IC7B01	271P023010	IC - SN74CBTD1G125DBVR	
IC7B02	271P023010	IC - SN74CBTD1G125DBVR	
IC7B03	271P023010	IC - SN74CBTD1G125DBVR	
IC7B20	275P533010	IC-C-MOS - M24C64WM6T	
IC7C00	263P479010	IC-C-MOS - TC74HC123AF	
IC7C30	263P154010	IC-C-MOS - SN74HC132DB	
IC7C50	275P419010	IC-C-MOS - SN74AHCT1G126DBV	
IC7C70	270P706020	IC - MAX823REUK	
IC7C71	275P419010	IC-C-MOS - SN74AHCT1G126DBV	
IC7C80	270P677010	IC - BA033FP	
IC7C85	270P677020	IC - BA05FP	
IC7D01	275P278010	IC-C-MOS - TC74LVX14FT	
IC7D02	270P818020	IC - CXA3506R	
IC7D03	267P172010	HIC - AF-9395A	
IC7E00	275P451010	IC-C-MOS - TC74HC4066AFN-ELP	
IC7E01	275P560010	IC-C-MOS - ADS931E	
IC7E02	275P560010	IC-C-MOS - ADS931E	
IC7E03	275P560010	IC-C-MOS - ADS931E	
IC7H00	275P963010	IC-C-MOS - DPM5	
IC7H07	270P992010	IC - BA18BC0FP	
IC7K21	270P831010	IC-C-MOS - OPA2350PA	
IC7M00	275P982010	IC - MT48LC2M32B2-7	
IC7N01	270P348010	IC - TLC2932IPW	
IC7N11	275P236020	IC-C-MOS - TC74LVX244FT	

[#] Model Legend:
(a) WS-48513, (b) WS-48613, (c) WS-55513, (d) WS-55613, (e) WS-55813, (f) WS-65513, (g) WS-65613, (h) WS-65713, (i) WS-65813, (j) WS-73513, (k) WS-73713

Ref #	Part #	Part Name & Description	[#]
IC7N21	275P769010	IC-C-MOS - TC74AC157FT	
IC7N31	275P769010	IC-C-MOS - TC74AC157FT	
IC7N41	274P901010	IC-C-MOS - TC74HCT7007AF	
IC7N61	274P901010	IC-C-MOS - TC74HCT7007AF	
IC8C01	**267P173010**	**HIC - STK394-250**	
IC8C02	**267P173010**	**HIC - STK394-250**	
IC8D00	275P595010	IC-C-MOS - CM0022AF	
IC8D01	275P222020	IC-C-MOS - M24C32MN6T	
IC8D02	272P603010	IC - LM78L05ACZ/NJM78L05A	
IC8E00	270P751010	IC - TL084CD	
IC8E01	270P751010	IC - TL084CD	
IC8E02	270P751010	IC - TL084CD	
IC8E03	275P721010	IC-C-MOS - CD0031AM	
IC9A10	267P164010	HIC - TNY264P	
IC9A20	**267P159010**	**HIC - STR-G6623**	
IC9A21	**270P816010**	**IC - NJM431L**	
IC9A22	**267P076030**	**HIC - SI-3050C**	
IC9A50	**267P161010**	**HIC - STR-F6428S**	
IC9A51	**267P062050**	**HIC - SE110N**	
IC9B03	270P879010	IC - SC1566IM-2.5	
IC9C21	270P928010	IC - BA17809FP	
IC9C22	270P677010	IC - BA033FP	
IC9C23	270P677020	IC - BA05FP	
IC9C24	270P677010	IC - BA033FP	
IC9C25	270P677030	IC - BAO9FP	

TRANSISTORS

CHIP Type Transistors (Listed by Part No.)

Part No.	Description
260P807030	DTC124EKAT146
260P817010	2SA1037K-Q
260P817030	2SA1037K-S
260P817050	2SA1037K-R,S/2SB709AI-R,S
260P817080	2SA1037K-R,S
260P818030	2SC2412K-S
260P818050	2SC2412K-R,S/2SD601AI-R,S
260P818080	2SC2412K-R,S
260P835030	2SC2413K-Q
260P836090	2SC3326-A,B
260P846030	DTC143ZKAT146
261P801010	2SA1252-5,6

Conventional Transistors (By Ref #)

Ref #	Part #	Part Name & Description	[#]
Q4B01	260C004020	TR - 2SC1740S-S/2SC3311A-S	
Q5250	261P026010	TR - 2SC3356	
Q5A01	**261P126010**	**TR - 2SD2052**	
Q5A02	260P561020	TR - 2SA1371-E	
Q5A03	260P386010	TR - 2SC2230-GR	
Q5A04	260C004010	TR - 2SC1740S-R,S/2SC3311A-R,S	
Q5A05	260C004050	TR - 2SA933S-R,S/2SA1309A-R,S	
Q5A06	260C004050	TR - 2SA933S-R,S/2SA1309A-R,S	
Q5A07	260C416030	TR - 2SC2274-F/2SC2274K-F	
Q5A08	260C004010	TR - 2SC1740S-R,S/2SC3311A-R,S	
Q5A09	260C255040	TR - 2SA950-Y	
Q5A10	260C004050	TR - 2SA933S-R,S/2SA1309A-R,S	
Q5A11	260C004010	TR - 2SC1740S-R,S/2SC3311A-R,S	
Q5A12	260C004010	TR - 2SC1740S-R,S/2SC3311A-R,S	
Q5A20	260C004050	TR - 2SA933S-R,S/2SA1309A-R,S	
Q5A31	**261P122010**	**TR - 2SC5778**	
Q5A32	261P127010	TR - 2SK2774-01	
Q5A33	260C004020	TR - 2SC1740S-S/2SC3311A-S	
Q5A34	260P561020	TR - 2SA1371-E	
Q5A35	260P386010	TR - 2SC2230-GR	
Q5A37	260C004010	TR - 2SC1740S-R,S/2SC3311A-R,S	
Q5A38	260C004010	TR - 2SC1740S-R,S/2SC3311A-R,S	
Q5A39	260C004050	TR - 2SA933S-R,S/2SA1309A-R,S	
Q5A40	260C004050	TR - 2SA933S-R,S/2SA1309A-R,S	
Q5A51	**261P082010**	**TR - 2SK2771-01R**	
Q5B10	260P325010	TR - 2SC2655-O,Y	
Q5B30	**260P630010**	**TR - 2SD2012**	
Q5H05	260C001030	TR - 2SC2603-F,G/2SC1740S-S,E	
Q5H06	260C001060	TR - 2SA1115-F/2SA933S-S	
Q5H08	260C001040	TR - 2SC2603-G/2SC1740S-E	
Q5H09	260C001030	TR - 2SC2603-F,G/2SC1740S-S,E	
Q5H10	260C001060	TR - 2SA1115-F/2SA933S-S	
Q5H11	260P644040	TR - 2SA1535-R	
Q5H12	260P647040	TR - 2SC3944-R	
Q5K00	260P664030	TR - 2SC4636	
Q5K01	260P664030	TR - 2SC4636	
Q5K02	260C001040	TR - 2SC2603-G/2SC1740S-E	
Q5K03	260C001060	TR - 2SA1115-F/2SA933S-S	
Q6B01	260C001050	TR - 2SA1115-E,F/2SA933S-R,S	
Q6B02	260C001050	TR - 2SA1115-E,F/2SA933S-R,S	
Q6G01	260C001050	TR - 2SA1115-E,F/2SA933S-R,S	
Q6R01	260C001050	TR - 2SA1115-E,F/2SA933S-R,S	
Q7C51	261P114010	TR - 2SA1585STPR	
Q7C66	261P114010	TR - 2SA1585STPR	
Q7K21	260C004010	TR - 2SC1740S-R,S/2SC3311A-R,S	
Q9A09	260C004010	TR - 2SC1740S-R,S/2SC3311A-R,S	
Q9A10	260C004010	TR - 2SC1740S-R,S/2SC3311A-R,S	
Q9A11	260C004010	TR - 2SC1740S-R,S/2SC3311A-R,S	
Q9A12	260C416030	TR - 2SC2274-F/2SC2274K-F	
Q9A20	261P101010	TR - PHP21N06T	
Q9A21	260C004010	TR - 2SC1740S-R,S/2SC3311A-R,S	
Q9A22	260C004010	TR - 2SC1740S-R,S/2SC3311A-R,S	
Q9A50	260C416030	TR - 2SC2274-F/2SC2274K-F	
Q9A51	260C004010	TR - 2SC1740S-R,S/2SC3311A-R,S	
Q9A53	260C004010	TR - 2SC1740S-R,S/2SC3311A-R,S	

DIODES

D2D28	262P805050	D-CHIP - UDZS5.1B
D2J91	262P075010	DIODE - RSB6.8S
D2L80	262P075010	DIODE - RSB6.8S
D2L81	262P075010	DIODE - RSB6.8S
D2W01	264P828010	D-CHIP - DAN202U/MA142WK
D2W02	264P828010	D-CHIP - DAN202U/MA142WK
D2W05	264P828010	D-CHIP - DAN202U/MA142WK
D2W06	264P828010	D-CHIP - DAN202U/MA142WK
D4B01	264D056020	DIODE - S5500D/EM1Z/ERB12-02RK
D4B04	264P045080	DIODE - 1S2076A/1S2471OM
D5280	262P089010	DIODE - MA2S728
D52A0	262P071070	DIODE-LE - SML-210FT
D5404	262P802010	D-CHIP - 1SS302
D5A01	264P045080	DIODE - 1S2076A/1S2471OM
D5A02	264D056020	DIODE - S5500D/EM1Z/ERB12-02RK

[#] Model Legend:

(a) WS-48513, (b) WS-48613, (c) WS-55513, (d) WS-55613, (e) WS-55813, (f) WS-65513, (g) WS-65613, (h) WS-65713, (i) WS-65813, (j) WS-73513, (k) WS-73713

Ref #	Part #	Part Name & Description	[#]
D5A03	264P045080	DIODE - 1S2076A/1S2471OM	
D5A12	264P045080	DIODE - 1S2076A/1S2471OM	
D5A13	264P045080	DIODE - 1S2076A/1S2471OM	
D5A14	264P045080	DIODE - 1S2076A/1S2471OM	
D5A33	264P669020	DIODE - S3L20U	
D5A34	264P460060	DIODE - EQA02-05C/RD5.1EB1	
D5A35	264P045080	DIODE - 1S2076A/1S2471OM	
D5A36	264P045080	DIODE - 1S2076A/1S2471OM	
D5A51	262P039010	DIODE - BYW96E/20	
D5A52	264P899010	DIODE - BYV26E	
D5A53	264P466040	DIODE - EQA02-15AB/RD16EB1	
D5A54	262P085010	DIODE - 11EFS2N-TA2B5	
D5A55	262P085010	DIODE - 11EFS2N-TA2B5	
D5A56	264P045080	DIODE - 1S2076A/1S2471OM	
D5A57	264P521010	DIODE - EU 1Z	
D5A58	264P045080	DIODE - 1S2076A/1S2471OM	
D5A60	264P463040	DIODE - RD9.1EB1	ijk
D5A60	264P465060	DIODE - EQA02-12B/RD13EB2	abcdefgh
D5B30	264P521010	DIODE - EU 1Z	
D5H01	264P045080	DIODE - 1S2076A/1S2471OM	
D5H02	264P045080	DIODE - 1S2076A/1S2471OM	
D5H03	264P045080	DIODE - 1S2076A/1S2471OM	
D5H04	264P045080	DIODE - 1S2076A/1S2471OM	
D5K01	264P528030	DIODE - RP 1H	
D5K02	264P543010	DIODE - EG01	
D5K03	264P543010	DIODE - EG01	
D5K10	264P528030	DIODE - RP 1H	
D5K11	264P528030	DIODE - RP 1H	
D6B01	262P063010	DIODE - 1SS244	
D6B07	262P063010	DIODE - 1SS244	
D6B08	262P063010	DIODE - 1SS244	
D6B11	262P085010	DIODE - 11EFS2N-TA2B5	
D6G01	262P063010	DIODE - 1SS244	
D6G03	264P457070	DIODE - RD3.3EB	
D6G07	262P063010	DIODE - 1SS244	
D6G08	262P063010	DIODE - 1SS244	
D6G11	262P085010	DIODE - 11EFS2N-TA2B5	
D6R01	262P063010	DIODE - 1SS244	
D6R05	264P045080	DIODE - 1S2076A/1S2471OM	
D6R06	264P045080	DIODE - 1S2076A/1S2471OM	
D6R07	262P063010	DIODE - 1SS244	
D6R08	262P063010	DIODE - 1SS244	
D6R10	264D056020	DIODE - S5500D/EM1Z/ERB12-02RK	
D6R11	262P085010	DIODE - 11EFS2N-TA2B5	
D7513	264P826010	DIODE-CHIP - DA204K	
D7C10	264P828010	D-CHIP - DAN202U/MA142WK	
D7C11	264P828010	D-CHIP - DAN202U/MA142WK	
D7C12	264P828010	D-CHIP - DAN202U/MA142WK	
D7K21	268P100010	DIODE-PHOTO - SFH235FA	
D7K22	264P045080	DIODE - 1S2076A/1S2471OM	
D7L20	262P075010	DIODE - RSB6.8S	
D7L21	264P212020	D-LED - LN31GPH	
D8C03	264P486060	DIODE - RD9.1FB3	
D8C04	264P486060	DIODE - RD9.1FB3	
D9A01	**262P031010**	**DIODE - D6SB80**	
D9A10	264P825040	DIODE - ERA15-08	
D9A11	264P825040	DIODE - ERA15-08	
D9A12	264P045080	DIODE - 1S2076A/1S2471OM	
D9A13	264P724010	DIODE - STF14	
D9A14	264P463030	DIODE - RD8.2EB	
D9A15	264P045080	DIODE - 1S2076A/1S2471OM	
D9A16	264P045080	DIODE - 1S2076A/1S2471OM	
D9A17	264P461050	DIODE - EQA02-06B/RD5.6EB3	
D9A18	264P045080	DIODE - 1S2076A/1S2471OM	
D9A19	264P467080	DIODE - EQA02-20A/RD20EB3	
D9A20	**264P358050**	**DIODE - RU4A**	
D9A21	264P899010	DIODE - BYV26E	
D9A22	264P045080	DIODE - 1S2076A/1S2471OM	
D9A23	264P045080	DIODE - 1S2076A/1S2471OM	
D9A24	264P045080	DIODE - 1S2076A/1S2471OM	
D9A25	264P045080	DIODE - 1S2076A/1S2471OM	
D9A26	264P045080	DIODE - 1S2076A/1S2471OM	
D9A27	264P045080	DIODE - 1S2076A/1S2471OM	
D9A30	**262P066010**	**DIODE - FMB-26L**	
D9A31	264P045080	DIODE - 1S2076A/1S2471OM	
D9A32	264P045080	DIODE - 1S2076A/1S2471OM	
D9A33	**264P628010**	**DIODE - FMB-G14L**	
D9A34	264P470070	DIODE - EQA02-32B/RD33EB3	
D9A35	264P469090	DIODE - EQA02-28C/RD30EB2	
D9A50	264P045080	DIODE - 1S2076A/1S2471OM	
D9A52	264P527020	DIODE - AK04	
D9A53	264P045080	DIODE - 1S2076A/1S2471OM	
D9A54	264P045080	DIODE - 1S2076A/1S2471OM	
D9A55	264P045080	DIODE - 1S2076A/1S2471OM	
D9A56	**264P566010**	**DIODE - FMP-G12S**	
D9A57	264P899010	DIODE - BYV26E	
D9A58	**264P588010**	**DIODE - FML-G16S**	
D9A60	264P669030	DIODE - S3L20U	
D9A61	264P669030	DIODE - S3L20U	
D9A64	264P045080	DIODE - 1S2076A/1S2471OM	
D9A65	264P045080	DIODE - 1S2076A/1S2471OM	
D9A95	264P045080	DIODE - 1S2076A/1S2471OM	
D9B00	264P828010	D-CHIP - DAN202U/MA142WK	

COILS

L1A09	409P923060	EMI-F-CHIP - BLM21B272S	
L1A20	325C141030	COIL-CHIP - 10MH-K	
L1A30	321C114010	COIL-RF - 2200MH-J	
L1A31	409P923060	EMI-F-CHIP - BLM21B272S	
L1B09	409P923060	EMI-F-CHIP - BLM21B272S	
L1B30	321C114010	COIL-RF - 2200MH-J	
L1B31	409P923060	EMI-F-CHIP - BLM21B272S	
L2A14	409P777080	EMI-F-CHIP - BLM21P221S	
L2A28	409P777080	EMI-F-CHIP - BLM21P221S	
L2A80	409P777080	EMI-F-CHIP - BLM21P221S	
L2A90	409P777080	EMI-F-CHIP - BLM21P221S	
L2A95	409P777080	EMI-F-CHIP - BLM21P221S	
L2B04	409P777080	EMI-F-CHIP - BLM21P221S	
L2B28	409P777080	EMI-F-CHIP - BLM21P221S	
L2C03	325C146090	COIL-CHIP - 33MH-J	
L2D07	409P777080	EMI-F-CHIP - BLM21P221S	
L2D08	409P777080	EMI-F-CHIP - BLM21P221S	
L2D09	409P777080	EMI-F-CHIP - BLM21P221S	
L2D13	409P777080	EMI-F-CHIP - BLM21P221S	
L2D17	409P777080	EMI-F-CHIP - BLM21P221S	
L2D18	409P777080	EMI-F-CHIP - BLM21P221S	

[#] Model Legend:

(a) WS-48513, (b) WS-48613, (c) WS-55513, (d) WS-55613, (e) WS-55813, (f) WS-65513, (g) WS-65613, (h) WS-65713, (i) WS-65813, (j) WS-73513, (k) WS-73713

Ref #	Part #	Part Name & Description	[#]
L2D19	409P777080	EMI-F-CHIP - BLM21P221S	
L2D23	409P777080	EMI-F-CHIP - BLM21P221S	
L2D24	409P777080	EMI-F-CHIP - BLM21P221S	
L2D26	409P777080	EMI-F-CHIP - BLM21P221S	
L2D27	409P777080	EMI-F-CHIP - BLM21P221S	
L2D31	409P777080	EMI-F-CHIP - BLM21P221S	
L2D32	409P777080	EMI-F-CHIP - BLM21P221S	
L2D37	409P777080	EMI-F-CHIP - BLM21P221S	
L2D70	409P777080	EMI-F-CHIP - BLM21P221S	
L2E00	409P777080	EMI-F-CHIP - BLM21P221S	
L2E10	325C146000	COIL-CHIP - 5.6MH-J	
L2E20	409P777080	EMI-F-CHIP - BLM21P221S	
L2E31	409P777080	EMI-F-CHIP - BLM21P221S	
L2E38	409P777080	EMI-F-CHIP - BLM21P221S	
L2E46	409P777080	EMI-F-CHIP - BLM21P221S	
L2F01	409P777080	EMI-F-CHIP - BLM21P221S	
L2F25	409P777080	EMI-F-CHIP - BLM21P221S	
L2F40	325C146030	COIL-CHIP - 10MH-J	
L2F60	325C146030	COIL-CHIP - 10MH-J	
L2F80	325C146030	COIL-CHIP - 10MH-J	
L2G01	409P777080	EMI-F-CHIP - BLM21P221S	
L2G25	409P777080	EMI-F-CHIP - BLM21P221S	
L2G50	325C146030	COIL-CHIP - 10MH-J	
L2G70	409P777080	EMI-F-CHIP - BLM21P221S	
L2G71	325C462020	COIL-PEAKING - 56MH-K	
L2G72	325C462020	COIL-PEAKING - 56MH-K	
L2H01	409P923060	EMI-F-CHIP - BLM21B272S	
L2H04	409P923060	EMI-F-CHIP - BLM21B272S	
L2H28	409P923060	EMI-F-CHIP - BLM21B272S	
L2H51	409P923060	EMI-F-CHIP - BLM21B272S	
L2J70	325C146030	COIL-CHIP - 10MH-J	
L2K42	409P777080	EMI-F-CHIP - BLM21P221S	
L2L42	409P777080	EMI-F-CHIP - BLM21P221S	
L2L80	409P923060	EMI-F-CHIP - BLM21B272S	
L2L81	409P923060	EMI-F-CHIP - BLM21B272S	
L2L82	409P923060	EMI-F-CHIP - BLM21B272S	
L2L83	409P923060	EMI-F-CHIP - BLM21B272S	
L2L84	409P923060	EMI-F-CHIP - BLM21B272S	
L2L85	409P923060	EMI-F-CHIP - BLM21B272S	
L2V19	409P923060	EMI-F-CHIP - BLM21B272S	
L2W01	409P923060	EMI-F-CHIP - BLM21B272S	
L2W02	409P923060	EMI-F-CHIP - BLM21B272S	
L2W03	409P923060	EMI-F-CHIP - BLM21B272S	
L2W04	409P923060	EMI-F-CHIP - BLM21B272S	
L2W06	409P923060	EMI-F-CHIP - BLM21B272S	
L2W14	409P923060	EMI-F-CHIP - BLM21B272S	
L2X01	409P923060	EMI-F-CHIP - BLM21B272S	
L2X10	409P923060	EMI-F-CHIP - BLM21B272S	
L2X15	409P923060	EMI-F-CHIP - BLM21B272S	
L3A10	409P923060	EMI-F-CHIP - BLM21B272S	
L3A49	409P923060	EMI-F-CHIP - BLM21B272S	
L4B01	321C130010	COIL-RF - 2MH	
L4B02	321C130090	COIL-RF - 10MH-K	
L5105	351P216010	COIL-CH-CHIP - 857CM-0009	
L5115	351P216010	COIL-CH-CHIP - 857CM-0009	
L51P3	409P777080	EMI-F-CHIP - BLM21P221S	
L51P4	409P777080	EMI-F-CHIP - BLM21P221S	
L5200	325C142050	COIL-CHIP - 100MH-K/J	

Ref #	Part #	Part Name & Description	[#]
L5201	325C240050	COIL-CHIP - 2.2MH-M	
L5202	325C240050	COIL-CHIP - 2.2MH-M	
L5203	325C240050	COIL-CHIP - 2.2MH-M	
L5204	325C240050	COIL-CHIP - 2.2MH-M	
L5250	325C144090	COIL-CHIP - 0.68MH-M -OR-K	
L5253	325C140040	COIL-CHIP - 1.8MH-M -OR-K-OR-J	
L5256	409P956010	EMI-F-CHIP - BLM18PG121S	
L52A0	409P777080	EMI-F-CHIP - BLM21P221S	
L52A1	409P777080	EMI-F-CHIP - BLM21P221S	
L52A2	409P956010	EMI-F-CHIP - BLM18PG121S	
L52A3	409P956010	EMI-F-CHIP - BLM18PG121S	
L52A4	325C240050	COIL-CHIP - 2.2MH-M	
L5301	409P777080	EMI-F-CHIP - BLM21P221S	
L5302	409P777080	EMI-F-CHIP - BLM21P221S	
L5400	409P955020	EMI-F-CHIP - BLM18BB220SN1	
L5401	409P955020	EMI-F-CHIP - BLM18BB220SN1	
L5402	409P955020	EMI-F-CHIP - BLM18BB220SN1	
L5403	409P955020	EMI-F-CHIP - BLM18BB220SN1	
L5404	409P955020	EMI-F-CHIP - BLM18BB220SN1	
L5405	409P955020	EMI-F-CHIP - BLM18BB220SN1	
L5406	409P955020	EMI-F-CHIP - BLM18BB220SN1	
L5407	409P955020	EMI-F-CHIP - BLM18BB220SN1	
L5470	409P955020	EMI-F-CHIP - BLM18BB220SN1	
L5471	409P955020	EMI-F-CHIP - BLM18BB220SN1	
L5472	409P955020	EMI-F-CHIP - BLM18BB220SN1	
L5473	409P955020	EMI-F-CHIP - BLM18BB220SN1	
L5474	409P955020	EMI-F-CHIP - BLM18BB220SN1	
L5475	409P955020	EMI-F-CHIP - BLM18BB220SN1	
L54A0	409P777080	EMI-F-CHIP - BLM21P221S	
L54A1	409P777080	EMI-F-CHIP - BLM21P221S	
L54A4	409P777080	EMI-F-CHIP - BLM21P221S	
L54A5	409P777080	EMI-F-CHIP - BLM21P221S	
L54A6	409P777080	EMI-F-CHIP - BLM21P221S	
L54D0	409P955020	EMI-F-CHIP - BLM18BB220SN1	
L54D1	409P955020	EMI-F-CHIP - BLM18BB220SN1	
L54D2	409P955010	EMI-F-CHIP - BLM18BB221SN1	
L55A0	409P777080	EMI-F-CHIP - BLM21P221S	
L55A1	409P777080	EMI-F-CHIP - BLM21P221S	
L55A2	409P777080	EMI-F-CHIP - BLM21P221S	
L55A3	409P777080	EMI-F-CHIP - BLM21P221S	
L55A4	409P777080	EMI-F-CHIP - BLM21P221S	
L55C0	409P777080	EMI-F-CHIP - BLM21P221S	
L55E3	409P955020	EMI-F-CHIP - BLM18BB220SN1	
L55E4	409P955020	EMI-F-CHIP - BLM18BB220SN1	
L55E5	409P955020	EMI-F-CHIP - BLM18BB220SN1	
L55E6	409P955020	EMI-F-CHIP - BLM18BB220SN1	
L55E7	409P955020	EMI-F-CHIP - BLM18BB220SN1	
L55F1	409P955020	EMI-F-CHIP - BLM18BB220SN1	
L55F2	409P955020	EMI-F-CHIP - BLM18BB220SN1	
L55F3	409P955020	EMI-F-CHIP - BLM18BB220SN1	
L55F5	409P955020	EMI-F-CHIP - BLM18BB220SN1	
L55F6	409P955020	EMI-F-CHIP - BLM18BB220SN1	
L55F7	409P955020	EMI-F-CHIP - BLM18BB220SN1	
L55F8	409P955020	EMI-F-CHIP - BLM18BB220SN1	
L55F9	409P955020	EMI-F-CHIP - BLM18BB220SN1	
L55G1	409P955020	EMI-F-CHIP - BLM18BB220SN1	
L5601	325C141030	COIL-CHIP - 10MH-K	
L5602	325C141030	COIL-CHIP - 10MH-K	

[#] Model Legend:

(a) WS-48513, (b) WS-48613, (c) WS-55513, (d) WS-55613, (e) WS-55813, (f) WS-65513, (g) WS-65613, (h) WS-65713, (i) WS-65813, (j) WS-73513, (k) WS-73713

Ref #	Part #	Part Name & Description	[#]
L56C0	325C141030	COIL-CHIP - 10MH-K	
L56D0	409P955020	EMI-F-CHIP - BLM18BB220SN1	
L56D1	409P955020	EMI-F-CHIP - BLM18BB220SN1	
L5901	325C241050	COIL-CHIP - 15MH-K	
L5903	409P777080	EMI-F-CHIP - BLM21P221S	
L5905	325C141030	COIL-CHIP - 10MH-K	
L5907	409P777080	EMI-F-CHIP - BLM21P221S	
L5908	409P777080	EMI-F-CHIP - BLM21P221S	
L5910	409P777080	EMI-F-CHIP - BLM21P221S	
L5911	409P777080	EMI-F-CHIP - BLM21P221S	
L5912	409P777080	EMI-F-CHIP - BLM21P221S	
L5913	409P777080	EMI-F-CHIP - BLM21P221S	
L59A0	409P777080	EMI-F-CHIP - BLM21P221S	
L59A1	409P777080	EMI-F-CHIP - BLM21P221S	
L59E0	409P777080	EMI-F-CHIP - BLM21P221S	
L59L0	409P923060	EMI-F-CHIP - BLM21B272S	
L59M0	325C140050	COIL-CHIP - 2.2MH-M/K/J	
L59M1	325C141090	COIL-CHIP - 33MH-K	
L59R0	325C141030	COIL-CHIP - 10MH-K	
L59R2	325C141030	COIL-CHIP - 10MH-K	
L59R3	325C141030	COIL-CHIP - 10MH-K	
L59T0	409P777080	EMI-F-CHIP - BLM21P221S	
L59T1	409P777080	EMI-F-CHIP - BLM21P221S	
L59T2	409P777080	EMI-F-CHIP - BLM21P221S	
L5A22	**333P059020**	**COIL-HORIZ-LIN**	**defghijk**
L5A31	411P001010	FERRITE-LEAD	
L5A51	321C151040	COIL-RF - 12MH-K	
L5A54	411D009020	FERRITE-CORE	
L5B30	321C130010	COIL-RF - 2MH	
L5H41	325C110090	COIL-PEAKING - 4.7MH-K	
L6B01	411P012010	FERRITE-BEAD	
L6B02	411P012010	FERRITE-BEAD	
L6G01	411P012010	FERRITE-BEAD	
L6G02	411P012010	FERRITE-BEAD	
L6R01	411P012010	FERRITE-BEAD	
L6R02	411P012010	FERRITE-BEAD	
L6R04	321C141010	COIL-RF - 6.8MH-M	
L7000	325C240050	COIL-CHIP - 2.2MH-M	
L7005	325C140010	COIL-CHIP - 1MH-M	
L7006	325C140010	COIL-CHIP - 1MH-M	
L7502	325C142050	COIL-CHIP - 100MH-K/J	
L7A90	409P777050	EMI-F-CHIP - BLM21B201S	
L7A99	409P923060	EMI-F-CHIP - BLM21B272S	
L7B20	409P777080	EMI-F-CHIP - BLM21P221S	
L7B91	409P777050	EMI-F-CHIP - BLM21B201S	
L7C00	409P923060	EMI-F-CHIP - BLM21B272S	
L7C63	409P876040	EMI-F-CHIP - CNF20C221S/CKD510JB1H221S	
L7C64	409P876040	EMI-F-CHIP - CNF20C221S/CKD510JB1H221S	
L7C65	409P876040	EMI-F-CHIP - CNF20C221S/CKD510JB1H221S	
L7C66	409P876040	EMI-F-CHIP - CNF20C221S/CKD510JB1H221S	
L7C70	409P923060	EMI-F-CHIP - BLM21B272S	
L7C80	409P777050	EMI-F-CHIP - BLM21B201S	
L7C81	409P923060	EMI-F-CHIP - BLM21B272S	
L7C82	409P923060	EMI-F-CHIP - BLM21B272S	
L7D30	325C241030	COIL-CHIP - 10MH-K	
L7D31	325C241030	COIL-CHIP - 10MH-K	
L7D41	325C241030	COIL-CHIP - 10MH-K	
L7D42	409P777080	EMI-F-CHIP - BLM21P221S	

Ref #	Part #	Part Name & Description	[#]
L7D90	409P777080	EMI-F-CHIP - BLM21P221S	
L7E00	409P777080	EMI-F-CHIP - BLM21P221S	
L7E11	325C241030	COIL-CHIP - 10MH-K	
L7E12	409P777080	EMI-F-CHIP - BLM21P221S	
L7E13	325C241030	COIL-CHIP - 10MH-K	
L7E14	409P777080	EMI-F-CHIP - BLM21P221S	
L7E15	325C241030	COIL-CHIP - 10MH-K	
L7G51	325C241030	COIL-CHIP - 10MH-K	
L7G66	325C241030	COIL-CHIP - 10MH-K	
L7G81	325C241030	COIL-CHIP - 10MH-K	
L7H01	409P777080	EMI-F-CHIP - BLM21P221S	
L7H04	409P777080	EMI-F-CHIP - BLM21P221S	
L7H29	409P777080	EMI-F-CHIP - BLM21P221S	
L7H49	409P777080	EMI-F-CHIP - BLM21P221S	
L7H73	409P777080	EMI-F-CHIP - BLM21P221S	
L7H76	409P777080	EMI-F-CHIP - BLM21P221S	
L7J13	409P777080	EMI-F-CHIP - BLM21P221S	
L7J23	325C241030	COIL-CHIP - 10MH-K	
L7J38	409P777080	EMI-F-CHIP - BLM21P221S	
L7J44	409P777080	EMI-F-CHIP - BLM21P221S	
L7K01	325C121030	COIL-PEAKING - 10MH-K	
L7M90	409P777080	EMI-F-CHIP - BLM21P221S	
L7N01	325C241030	COIL-CHIP - 10MH-K	
L7N02	409P777080	EMI-F-CHIP - BLM21P221S	
L7N11	409P777080	EMI-F-CHIP - BLM21P221S	
L7N21	409P777080	EMI-F-CHIP - BLM21P221S	
L7N31	409P777080	EMI-F-CHIP - BLM21P221S	
L7N41	409P777080	EMI-F-CHIP - BLM21P221S	
L7N61	409P777080	EMI-F-CHIP - BLM21P221S	
L8C01	321C141070	COIL-RF - 22MH-K	
L8C02	321C141070	COIL-RF - 22MH-K	
L8C03	321C141070	COIL-RF - 22MH-K	
L8C04	321C141070	COIL-RF - 22MH-K	
L8D01	409P777080	EMI-F-CHIP - BLM21P221S	
L8D02	409P777080	EMI-F-CHIP - BLM21P221S	
L8D03	409P777080	EMI-F-CHIP - BLM21P221S	
L8D04	409P777080	EMI-F-CHIP - BLM21P221S	
L8D05	409P777080	EMI-F-CHIP - BLM21P221S	
L8D06	409P777080	EMI-F-CHIP - BLM21P221S	
L8D07	409P777080	EMI-F-CHIP - BLM21P221S	
L8G00	409P777080	EMI-F-CHIP - BLM21P221S	
L8G01	409P777080	EMI-F-CHIP - BLM21P221S	
L9A10	321C141070	COIL-RF - 22MH-K	
L9A20	411D009020	FERRITE-CORE	
L9A21	411D009020	FERRITE-CORE	
L9A22	321C141020	COIL-RF - 8.2MH	
L9A23	321C141020	COIL-RF - 8.2MH	
L9A24	321C141070	COIL-RF - 22MH-K	
L9A50	411D009020	FERRITE-CORE	
L9A52	411D009020	FERRITE-CORE	
L9A53	321C141010	COIL-RF - 6.8MH-M	
L9A54	411D009020	FERRITE-CORE	
L9A55	321C142030	COIL-RF - 68MH-K	
L9A56	411D009020	FERRITE-CORE	
L9A57	321C141070	COIL-RF - 22MH-K	
L9A58	321C141070	COIL-RF - 22MH-K	
L9A59	321C141070	COIL-RF - 22MH-K	
L9A60	321C141070	COIL-RF - 22MH-K	

[#] Model Legend:

(a) WS-48513, (b) WS-48613, (c) WS-55513, (d) WS-55613, (e) WS-55813, (f) WS-65513, (g) WS-65613, (h) WS-65713, (i) WS-65813, (j) WS-73513, (k) WS-73713

Ref #	Part #	Part Name & Description	[#]
L9A62	321C141010	COIL-RF - 6.8MH-M	
L9A63	321C141010	COIL-RF - 6.8MH-M	
L9A64	321C130090	COIL-RF - 10MH-K	
L9A66	321C141070	COIL-RF - 22MH-K	
L9A67	321C130090	COIL-RF - 10MH-K	
L9A68	321C130010	COIL-RF - 2MH	
L9A69	321C130010	COIL-RF - 2MH	
L9B02	321C140060	COIL-RF - 2.7MH-M	
L9B03	321C140060	COIL-RF - 2.7MH-M	
L9B05	409P777080	EMI-F-CHIP - BLM21P221S	
L9B06	409P777080	EMI-F-CHIP - BLM21P221S	
L9B07	409P777080	EMI-F-CHIP - BLM21P221S	
L9B09	409P777080	EMI-F-CHIP - BLM21P221S	
L9B10	409P777080	EMI-F-CHIP - BLM21P221S	
L9B11	409P777080	EMI-F-CHIP - BLM21P221S	
L9B13	409P777080	EMI-F-CHIP - BLM21P221S	
L9B14	409P777080	EMI-F-CHIP - BLM21P221S	
L9B15	409P777080	EMI-F-CHIP - BLM21P221S	
L9D00	**351P222010**	**LINE FILTER - ELF24V050A**	
L9D01	**351P222010**	**LINE FILTER - ELF24V050A**	
L9D02	351P223010	FILTER-LINE - SLF15N0601	
LC2C02	409P876020	EMI-F-CHIP - CNF20C470S/CKD510JB1H470S	
LC2C03	409P876020	EMI-F-CHIP - CNF20C470S/CKD510JB1H470S	
LC2C07	409P876020	EMI-F-CHIP - CNF20C470S/CKD510JB1H470S	
LC2J40	409P876060	EMI-F-CHIP - CNF20R102S/CKD510JB1H102S	
LC2J41	409P876060	EMI-F-CHIP - CNF20R102S/CKD510JB1H102S	
LC2J42	409P876060	EMI-F-CHIP - CNF20R102S/CKD510JB1H102S	
LC2J43	409P876060	EMI-F-CHIP - CNF20R102S/CKD510JB1H102S	
LC2J44	409P876060	EMI-F-CHIP - CNF20R102S/CKD510JB1H102S	
LC7D02	409P875090	EMI-F-CHIP - ELKE103FA	
LC7D05	409P875090	EMI-F-CHIP - ELKE103FA	
LC7D10	409P876020	EMI-F-CHIP - CNF20C470S/CKD510JB1H470S	
LC7D11	409P876020	EMI-F-CHIP - CNF20C470S/CKD510JB1H470S	
LC7D12	409P876020	EMI-F-CHIP - CNF20C470S/CKD510JB1H470S	
LC7D13	409P876020	EMI-F-CHIP - CNF20C470S/CKD510JB1H470S	
LC7D14	409P876020	EMI-F-CHIP - CNF20C470S/CKD510JB1H470S	
LC7E10	409P876020	EMI-F-CHIP - CNF20C470S/CKD510JB1H470S	
LC7E11	409P876020	EMI-F-CHIP - CNF20C470S/CKD510JB1H470S	
LC7E12	409P876020	EMI-F-CHIP - CNF20C470S/CKD510JB1H470S	
LC7E13	409P876020	EMI-F-CHIP - CNF20C470S/CKD510JB1H470S	
LC7E14	409P876020	EMI-F-CHIP - CNF20C470S/CKD510JB1H470S	
LC7G01	409P876020	EMI-F-CHIP - CNF20C470S/CKD510JB1H470S	
LC7G02	409P876020	EMI-F-CHIP - CNF20C470S/CKD510JB1H470S	
LC7G03	409P876020	EMI-F-CHIP - CNF20C470S/CKD510JB1H470S	
LC7G04	409P876020	EMI-F-CHIP - CNF20C470S/CKD510JB1H470S	
LC7G05	409P876020	EMI-F-CHIP - CNF20C470S/CKD510JB1H470S	
LC7G06	409P876020	EMI-F-CHIP - CNF20C470S/CKD510JB1H470S	
LC7G07	409P876020	EMI-F-CHIP - CNF20C470S/CKD510JB1H470S	
LC7G08	409P876020	EMI-F-CHIP - CNF20C470S/CKD510JB1H470S	
LC7G09	409P875090	EMI-F-CHIP - ELKE103FA	
LC7G10	409P875090	EMI-F-CHIP - ELKE103FA	
LC7G11	409P876020	EMI-F-CHIP - CNF20C470S/CKD510JB1H470S	
LC7G12	409P876020	EMI-F-CHIP - CNF20C470S/CKD510JB1H470S	
LC7G13	409P876020	EMI-F-CHIP - CNF20C470S/CKD510JB1H470S	
LC7G14	409P876020	EMI-F-CHIP - CNF20C470S/CKD510JB1H470S	
LC7G15	409P876020	EMI-F-CHIP - CNF20C470S/CKD510JB1H470S	
LC7G16	409P876020	EMI-F-CHIP - CNF20C470S/CKD510JB1H470S	
LC7G17	409P876020	EMI-F-CHIP - CNF20C470S/CKD510JB1H470S	

Ref #	Part #	Part Name & Description	[#]

TRANSFORMERS

T5A31	**349P216010**	**TRANS-HORIZ**	
T5A32	**336P040010**	**TRANS-HORIZ-DRIVE**	
T5A51	**334P281010**	**TRANS-FLYBACK**	
T9A10	350P796010	TRANS-PWR - ETS19AB1M3AG	
T9A20	**350P766020**	**TRANS-PWR - ETS35AASJ3ND**	
T9A50	350P800010	TRANS-PWR - ZTS7484	

VARIABLE RESISTORS

RV9D00	**265P100020**	**VAR - ERZV10D271CS**	
	129P059050	VR-FOCUS	

RESISTORS

CHIP Type Resistors (Listed by Value)

Part No.	Value	Part No.	Value
103P509050	1/16W 0OHM	103P402070	1/8W 1.5K-J
103P488000	1/4W 1-J	103P502080	1/16W 1.8K-J
103P509000	1/16W 6.8-J	103P493020	1/16W 2K-F
103P500010	1/16W 10-J	103P493030	1/16W 2.2K-F
103P793030	1/16W 22-F	103P502090	1/16W 2.2K-J
103P500050	1/16W 22-J	103P493050	1/16W 2.7K-F
103P400050	1/8W 22-J	103P503000	1/16W 2.7K-J
103P793040	1/16W 24-F	103P493060	1/16W 3K-F
103P500060	1/16W 27-J	103P493070	1/16W 3.3K-F
103P500070	1/16W 33-J	103P503010	1/16W 3.3K-J
103P500080	1/16W 39-J	103P493090	1/16W 3.9K-F
103P500090	1/16W 47-J	103P503020	1/16W 3.9K-J
103P401000	1/8W 56-J	103P494010	1/16W 4.7K-F
103P844030	1/16W 56-D	103P503030	1/16W 4.7K-J
103P501000	1/16W 56-J	103P494020	1/16W 5.1K-F
103P501010	1/16W 68-J	103P494030	1/16W 5.6K-F
103P794060	1/16W 75-F	103P503040	1/16W 5.6K-J
103P501020	1/16W 82-J	103P494050	1/16W 6.8K-F
103P501030	1/16W 100-J	103P503050	1/16W 6.8K-J
103P401030	1/8W 100-J	103P503060	1/16W 8.2K-J
103P501040	1/16W 120-J	103P494090	1/16W 10K-F
103P490050	1/16W 150-F	103P503070	1/16W 10K-J
103P401050	1/8W 150-J	103P495010	1/16W 12K-F
103P490070	1/16W 180-F	103P503080	1/16W 12K-J
103P501060	1/16W 180-J	103P503090	1/16W 15K-J
103P490090	1/16W 220-F	103P495040	1/16W 16K-F
103P501070	1/16W 220-J	103P504000	1/16W 18K-J
103P491000	1/16W 240-F	103P504010	1/16W 22K-J
103P401080	1/8W 270-J	103P504020	1/16W 27K-J
103P501080	1/16W 270-J	103P496000	1/16W 30K-F
103P491020	1/16W 300-F	103P496010	1/16W 33K-F
103P501090	1/16W 330-J	103P504030	1/16W 33K-J
103P401090	1/8W 330-J	103P504040	1/16W 39K-J
103P491040	1/16W 360-F	103P504050	1/16W 47K-J
103P491050	1/16W 390-F	103P496070	1/16W 56K-F
103P502010	1/16W 470-J	103P504060	1/16W 56K-J
103P491080	1/16W 510-F	103P496080	1/16W 62K-F
103P491090	1/16W 560-F	103P496090	1/16W 68K-F
103P502020	1/16W 560-J	103P504070	1/16W 68K-J
103P492000	1/16W 620-F	103P509090	1/16W 75K-J
103P492010	1/16W 680-F	103P504080	1/16W 82K-J
103P502030	1/16W 680-J	103P497030	1/16W 100K-F

[#] Model Legend:

(a) WS-48513, (b) WS-48613, (c) WS-55513, (d) WS-55613, (e) WS-55813, (f) WS-65513, (g) WS-65613, (h) WS-65713, (i) WS-65813, (j) WS-73513, (k) WS-73713

	103P492030	1/16W 820-F	103P504090	1/16W 100K-J
	103P502040	1/16W 820-J	103P497050	1/16W 120K-F
	103P492050	1/16W 1K-F	103P505000	1/16W 120K-J
	103P502050	1/16W 1K-J	103P505090	1/16W 680K-J
	103P492060	1/16W 1.1K-F	103P506000	1/16W 820K-J
	103P502060	1/16W 1.2K-J	103P506010	1/16W 1M-J
	103P492090	1/16W 1.5K-F	103P506070	1/16W 3.3M-J
	103P502070	1/16W 1.5K-J		

Conventional Resistors (By Ref #)

Ref #	Part #	Part Name & Description	[#]
R3E02	103P712080	R-CARBON - 1/4W 1.8K-J	
R3E04	103P712080	R-CARBON - 1/4W 1.8K-J	
R3E05	103P713010	R-CARBON - 1/4W 3.3K-J	
R3E06	103P713070	R-CARBON - 1/4W 10K-J	
R3E09	109D151010	R-CARBON - 1/4W 2.2-J	
R3E11	109D151010	R-CARBON - 1/4W 2.2-J	
R3E12	109D151010	R-CARBON - 1/4W 2.2-J	
R3E14	109D151010	R-CARBON - 1/4W 2.2-J	
R3E15	103P713050	R-CARBON - 1/4W 6.8K-J	
R3E16	103P713050	R-CARBON - 1/4W 6.8K-J	
R4B01	103P465040	R-METAL - 1/4W 16K-F	
R4B02	103P465040	R-METAL - 1/4W 16K-F	
R4B03	103P713090	R-CARBON - 1/4W 15K-J	
R4B10	103C188040	R-METAL - 2W 2.2-J	defghijk
R4B12	103C188040	R-METAL - 2W 2.2-J	
R4B13	103P466000	R-METAL - 1/4W 2.4K-F	
R4B14	103P466000	R-METAL - 1/4W 2.4K-F	
R4B16	109P095010	R-METAL-LIN - 1/4W 5.1K-J	
R4B17	103P711090	R-CARBON - 1/4W 330-J	
R4B18	103P338020	R-CARBON-25 - 1/4W 1.5-J	
R4B20	103P711090	R-CARBON - 1/4W 330-J	
R4B23	103P411070	R-CARBON - 1/4W 220-J	
R4B24	103P712050	R-CARBON - 1/4W 1K-J	
R4B25	103P712050	R-CARBON - 1/4W 1K-J	
R4B26	103P713030	R-CARBON - 1/4W 4.7K-J	
R4B27	103P465040	R-METAL - 1/4W 16K-F	
R5A00	103P711030	R-CARBON - 1/4W 100-J	
R5A01	103P713010	R-CARBON - 1/4W 3.3K-J	
R5A02	103P711030	R-CARBON - 1/4W 100-J	
R5A03	103P713010	R-CARBON - 1/4W 3.3K-J	
R5A04	103P462040	R-METAL - 1/4W 910-F	
R5A05	103P713010	R-CARBON - 1/4W 3.3K-J	
R5A06	103P712050	R-CARBON - 1/4W 1K-J	
R5A07	103P714080	R-CARBON - 1/4W 82K-J	
R5A08	103P714050	R-CARBON - 1/4W 47K-J	
R5A09	103P714040	R-CARBON - 1/4W 39K-J	
R5A10	103P714040	R-CARBON - 1/4W 39K-J	
R5A11	103P713070	R-CARBON - 1/4W 10K-J	
R5A12	103P712050	R-CARBON - 1/4W 1K-J	
R5A13	103P464020	R-METAL - 1/4W 2.4K-F	
R5A14	103P464030	R-METAL - 1/4W 5.6K-F	
R5A15	103P713030	R-CARBON - 1/4W 4.7K-J	
R5A16	103P714010	R-CARBON - 1/4W 22K-J	
R5A17	103P712050	R-CARBON - 1/4W 1K-J	
R5A18	103P712050	R-CARBON - 1/4W 1K-J	
R5A19	103P712010	R-CARBON - 1/4W 470-J	
R5A20	103P714050	R-CARBON - 1/4W 47K-J	
R5A21	103P713030	R-CARBON - 1/4W 4.7K-J	
R5A22	103P714010	R-CARBON - 1/4W 22K-J	
R5A23	103P713070	R-CARBON - 1/4W 10K-J	
R5A24	103P714070	R-CARBON - 1/4W 68K-J	
R5A25	103P464030	R-METAL - 1/4W 5.6K-F	
R5A26	103P464030	R-METAL - 1/4W 5.6K-F	
R5A27	103P713070	R-CARBON - 1/4W 10K-J	
R5A28	103P715010	R-CARBON - 1/4W 150K-J	
R5A29	103P714040	R-CARBON - 1/4W 39K-J	
R5A30	103P714040	R-CARBON - 1/4W 39K-J	
R5A31	103P712080	R-CARBON - 1/4W 1.8K-J	
R5A32	103P713070	R-CARBON - 1/4W 10K-J	
R5A33	103P463060	R-METAL - 1/4W 3K-F	
R5A34	103P711000	R-CARBON - 1/4W 56-J	
R5A35	103P142010	R-CARBON - 1/2W 470-J	
R5A36	103C393020	R-METAL-P - 3W 3.9K-J	defghijk
R5A36	103C393030	R-METAL-P - 3W 4.7K-J	abc
R5A37	103C393020	R-METAL-P - 3W 3.9K-J	defghijk
R5A37	103C393030	R-METAL-P - 3W 4.7K-J	abc
R5A38	103C197040	R-METAL - 3W 0.33-J	
R5A39	103P140090	R-CARBON - 1/2W 47-J	
R5A40	103P714090	R-CARBON - 1/4W 100K-J	
R5A41	103P715020	R-CARBON - 1/4W 180K-J	
R5A42	103P713070	R-CARBON - 1/4W 10K-J	
R5A43	103P714010	R-CARBON - 1/4W 22K-J	
R5A44	103P712080	R-CARBON - 1/4W 1.8K-J	
R5A45	103P143050	R-CARBON - 1/2W 6.8K-J	
R5A46	103C391050	R-METAL-P - 3W 150-J	
R5A47	103P714080	R-CARBON - 1/4W 82K-J	
R5A48	103P714050	R-CARBON - 1/4W 47K-J	
R5A49	103P711030	R-CARBON - 1/4W 100-J	
R5A50	103P714050	R-CARBON - 1/4W 47K-J	
R5A51	103P712050	R-CARBON - 1/4W 1K-J	
R5A52	103P713010	R-CARBON - 1/4W 3.3K-J	
R5A53	103P713070	R-CARBON - 1/4W 10K-J	
R5A54	103P713090	R-CARBON - 1/4W 15K-J	
R5A55	103P143050	R-CARBON - 1/2W 6.8K-J	
R5A56	103P715060	R-CARBON - 1/4W 390K-J	
R5A57	103P711030	R-CARBON - 1/4W 100-J	
R5A58	**103P464080**	**R-METAL - 1/4W 9.1K-F**	
R5A59	**103P461070**	**R-METAL - 1/4W 470-F**	
R5A60	**103P464000**	**R-METAL - 1/4W 4.3K-F**	
R5A61	103P465010	R-METAL - 1/4W 12K-F	
R5A62	103P711070	R-CARBON - 1/4W 220-J	
R5A63	103P466080	R-METAL - 1/4W 62K-F	
R5A64	103P710090	R-CARBON - 1/4W 47-J	
R5A65	103P141030	R-CARBON - 1/2W 100-J	
R5A66	**103P466010**	**R-METAL - 1/4W 33K-F**	
R5A67	**103P465080**	**R-METAL - 1/4W 24K-F**	
R5A68	**103P463020**	**R-METAL - 1/4W 2K-F**	**ijk**
R5A68	**103P463050**	**R-METAL - 1/4W 2.7K-F**	**abcdefgh**
R5A69	**103P461090**	**R-METAL - 1/4W 560-F**	**ijk**
R5A69	**103P462010**	**R-METAL - 1/4W 680-F**	**abcdefgh**
R5A70	**103P463040**	**R-METAL - 1/4W 2.4K-F**	**ijk**
R5A70	**103P463070**	**R-METAL - 1/4W 3.3K-F**	**abcdefgh**
R5A71	103P713070	R-CARBON - 1/4W 10K-J	
R5A72	**103P463050**	**R-METAL - 1/4W 2.7K-F**	
R5A73	103P714010	R-CARBON - 1/4W 22K-J	

[#] Model Legend:

(a) WS-48513, (b) WS-48613, (c) WS-55513, (d) WS-55613, (e) WS-55813, (f) WS-65513, (g) WS-65613, (h) WS-65713, (i) WS-65813, (j) WS-73513, (k) WS-73713

Ref #	Part #	Part Name & Description	[#]
R5A74	103P713070	R-CARBON - 1/4W 10K-J	
R5A75	103P713070	R-CARBON - 1/4W 10K-J	
R5A76	103P713070	R-CARBON - 1/4W 10K-J	
R5A77	103P711090	R-CARBON - 1/4W 330-J	
R5A78	103P714010	R-CARBON - 1/4W 22K-J	
R5A79	103P713030	R-CARBON - 1/4W 4.7K-J	
R5A80	**109P175010**	**R-WIRE - 2W 0.12-J**	
R5A81	103P711030	R-CARBON - 1/4W 100-J	
R5A82	**103P370090**	**R-FUSE - 1/4W 47-J**	
R5A83	**103P464070**	**R-METAL - 1/4W 8.2K-F**	
R5A84	**103P464070**	**R-METAL - 1/4W 8.2K-F**	
R5A85	103P710070	R-CARBON - 1/4W 33-J	
R5A86	103P466030	R-METAL - 1/4W 39K-F	
R5A87	103P142060	R-CARBON - 1/2W 1.2K-J	
R5A88	103P714010	R-CARBON - 1/4W 22K-J	
R5A89	103P466090	R-METAL - 1/4W 68K-F	
R5A90	103P711060	R-CARBON - 1/4W 180-J	
R5A91	103P467030	R-METAL - 1/4W 100K-F	
R5A92	103P465070	R-METAL - 1/4W 22K-F	
R5A93	103P140090	R-CARBON - 1/2W 47-J	
R5A94	103C390070	R-METAL-P - 3W 33-J	
R5A95	103P714030	R-CARBON - 1/4W 33K-J	
R5A96	103P466080	R-METAL - 1/4W 62K-F	
R5A97	103P712010	R-CARBON - 1/4W 470-J	
R5A99	103P714090	R-CARBON - 1/4W 100K-J	
R5B01	103P714030	R-CARBON - 1/4W 33K-J	
R5B02	103P714090	R-CARBON - 1/4W 100K-J	
R5B03	103P712060	R-CARBON - 1/4W 1.2K-J	
R5B04	103P711030	R-CARBON - 1/4W 100-J	
R5B05	103P711030	R-CARBON - 1/4W 100-J	
R5B09	103P712090	R-CARBON - 1/4W 2.2K-J	
R5B10	103C181060	R-METAL - 2W 180-J	
R5B11	103P463030	R-METAL - 1/4W 2.2K-F	
R5B12	103P465000	R-METAL - 1/4W 2.4K-F	
R5B13	103P714010	R-CARBON - 1/4W 22K-J	
R5B20	103P711030	R-CARBON - 1/4W 100-J	
R5B30	103C198010	R-METAL - 3W 1.2-J	
R5H02	103P750010	R-FUSE - 1/4W 10-J	
R5H03	103P715000	R-CARBON - 1/4W 120K-J	
R5H04	103P712010	R-CARBON - 1/4W 470-J	
R5H05	103P712060	R-CARBON - 1/4W 1.2K-J	
R5H06	103P712060	R-CARBON - 1/4W 1.2K-J	
R5H07	103P418080	R-CARBON - 1/4W 4.7-J	
R5H08	103P418080	R-CARBON - 1/4W 4.7-J	
R5H22	103P712010	R-CARBON - 1/4W 470-J	
R5H40	103P712020	R-CARBON - 1/4W 560-J	
R5H41	103P712060	R-CARBON - 1/4W 1.2K-J	
R5H42	103P711050	R-CARBON - 1/4W 150-J	
R5H47	103C280090	R-METAL-CP - 2W 47-J	
R5H48	103P712060	R-CARBON - 1/4W 1.2K-J	
R5H49	103P714070	R-CARBON - 1/4W 68K-J	
R5H50	103P714070	R-CARBON - 1/4W 68K-J	
R5H51	103P712060	R-CARBON - 1/4W 1.2K-J	
R5H53	103P715000	R-CARBON - 1/4W 120K-J	
R5H55	103P141000	R-CARBON - 1/2W 56-J	
R5H56	103P141000	R-CARBON - 1/2W 56-J	
R5H58	103P418030	R-CARBON - 1/4W 1.8-J	
R5H59	103C181030	R-METAL - 2W 100-J	

Ref #	Part #	Part Name & Description	[#]
R5H60	103C178080	R-METAL - 1W 4.7-J	
R5H67	103P418030	R-CARBON - 1/4W 1.8-J	
R5H83	103P466000	R-METAL - 1/4W 2.4K-F	
R5H84	103P713040	R-CARBON - 1/4W 5.6K-J	
R5K01	109D031070	R-COMP - 1/2W 10K-K	
R5K02	103P412050	R-CARBON - 1/4W 1K-J	
R5K03	103P145000	R-CARBON - 1/2W 120K-J	
R5K04	103P144090	R-CARBON - 1/2W 100K-J	
R5K05	103P145000	R-CARBON - 1/2W 120K-J	
R5K06	103P144090	R-CARBON - 1/2W 100K-J	
R5K07	103P145000	R-CARBON - 1/2W 120K-J	
R5K08	103P144090	R-CARBON - 1/2W 100K-J	
R5K09	103P762020	R-FUSE - 1/2W 560-J	
R5K10	103P711010	R-CARBON - 1/4W 68-J	
R5K11	103P718060	R-CARBON - 1/4W 3.3-J	
R5K12	**103P760060**	**R-FUSE - 1/2W 27-J**	
R5K13	103P145000	R-CARBON - 1/2W 120K-J	
R5K14	103P144090	R-CARBON - 1/2W 100K-J	
R5K15	103P145000	R-CARBON - 1/2W 120K-J	
R5K16	103P144090	R-CARBON - 1/2W 100K-J	
R5K17	103P145000	R-CARBON - 1/2W 120K-J	
R5K18	103P144090	R-CARBON - 1/2W 100K-J	
R5K19	103P464000	R-METAL - 1/4W 4.3K-F	
R5K20	103P712060	R-CARBON - 1/4W 1.2K-J	
R5K21	103P713070	R-CARBON - 1/4W 10K-J	
R5K22	103P145050	R-CARBON - 1/2W 330K-J	
R5K23	103P145050	R-CARBON - 1/2W 330K-J	
R5K24	103P145050	R-CARBON - 1/2W 330K-J	
R5K25	103P713040	R-CARBON - 1/4W 5.6K-J	
R5K31	103P711030	R-CARBON - 1/4W 100-J	
R5K32	103P466020	R-METAL - 1/4W 2.4K-F	
R5K33	103P465060	R-METAL - 1/4W 20K-F	
R5K34	**103P760060**	**R-FUSE - 1/2W 27-J**	
R5K46	103P712010	R-CARBON - 1/4W 470-J	
R5K50	**103P762050**	**R-FUSE - 1/2W 1K-J**	
R6B01	103P711030	R-CARBON - 1/4W 100-J	
R6B02	103P714010	R-CARBON - 1/4W 22K-J	
R6B03	103P714010	R-CARBON - 1/4W 22K-J	
R6B04	103P465070	R-METAL - 1/4W 22K-F	
R6B05	103P411010	R-CARBON - 1/4W 68-J	
R6B06	103P462050	R-METAL - 1/4W 1K-F	
R6B07	103P711030	R-CARBON - 1/4W 100-J	
R6B08	103P710010	R-CARBON - 1/4W 10-J	
R6B09	103P711030	R-CARBON - 1/4W 100-J	
R6B10	103P711030	R-CARBON - 1/4W 100-J	
R6B11	103C194010	R-METAL - 3W 22K-J	
R6B13	103P331030	R-CARBON - 1/4W 100-J	
R6B14	103P413050	R-CARBON - 1/4W 6.8K-J	
R6B15	103P711030	R-CARBON - 1/4W 100-J	
R6B16	103P411000	R-CARBON - 1/4W 56-J	
R6B17	101P221030	R-COMP - 1/2W 220-K	
R6B18	103P711030	R-CARBON - 1/4W 100-J	
R6B20	101P221030	R-COMP - 1/2W 220-K	
R6B21	103P712060	R-CARBON - 1/4W 1.2K-J	
R6B22	103P711030	R-CARBON - 1/4W 100-J	
R6G01	103P711030	R-CARBON - 1/4W 100-J	
R6G02	103P714010	R-CARBON - 1/4W 22K-J	
R6G03	103P714010	R-CARBON - 1/4W 22K-J	

[#] Model Legend:

(a) WS-48513, (b) WS-48613, (c) WS-55513, (d) WS-55613, (e) WS-55813, (f) WS-65513, (g) WS-65613, (h) WS-65713, (i) WS-65813, (j) WS-73513, (k) WS-73713

Ref #	Part #	Part Name & Description	[#]
R6G04	103P465050	R-METAL - 1/4W 18K-F	
R6G05	103P411010	R-CARBON - 1/4W 68-J	
R6G06	103P462030	R-METAL - 1/4W 820-F	
R6G07	103P711030	R-CARBON - 1/4W 100-J	
R6G08	103P710010	R-CARBON - 1/4W 10-J	
R6G09	103P711030	R-CARBON - 1/4W 100-J	
R6G10	103P711030	R-CARBON - 1/4W 100-J	
R6G11	103C194010	R-METAL - 3W 22K-J	
R6G13	103P331030	R-CARBON - 1/4W 100-J	
R6G16	103P411000	R-CARBON - 1/4W 56-J	
R6G17	101P221030	R-COMP - 1/2W 220-K	
R6G20	101P221030	R-COMP - 1/2W 220-K	
R6G21	103P712060	R-CARBON - 1/4W 1.2K-J	
R6G22	103P711030	R-CARBON - 1/4W 100-J	
R6R01	103P711030	R-CARBON - 1/4W 100-J	
R6R02	103P714010	R-CARBON - 1/4W 22K-J	
R6R03	103P714010	R-CARBON - 1/4W 22K-J	
R6R04	103P465070	R-METAL - 1/4W 22K-F	
R6R05	103P411010	R-CARBON - 1/4W 68-J	
R6R06	103P462050	R-METAL - 1/4W 1K-F	
R6R07	103P711030	R-CARBON - 1/4W 100-J	
R6R08	103P710010	R-CARBON - 1/4W 10-J	
R6R09	103P711030	R-CARBON - 1/4W 100-J	
R6R10	103P711030	R-CARBON - 1/4W 100-J	
R6R11	103C194010	R-METAL - 3W 22K-J	
R6R13	103P331030	R-CARBON - 1/4W 100-J	
R6R16	103P411000	R-CARBON - 1/4W 56-J	
R6R17	101P221030	R-COMP - 1/2W 220-K	
R6R19	103P464030	R-METAL - 1/4W 5.6K-F	
R6R20	101P221030	R-COMP - 1/2W 220-K	
R6R22	103P711030	R-CARBON - 1/4W 100-J	
R7044	103C288040	R-METAL-CP - 2W 2.2-J	
R7C55	103C178010	R-METAL - 1W 1.2-J	
R7C68	103C178010	R-METAL - 1W 1.2-J	
R7K01	103P712050	R-CARBON - 1/4W 1K-J	
R7K02	103P713010	R-CARBON - 1/4W 3.3K-J	
R7K05	103P713050	R-CARBON - 1/4W 6.8K-J	
R7K21	103P711080	R-CARBON - 1/4W 270-J	
R7K22	103P714050	R-CARBON - 1/4W 47K-J	
R7K23	103P713080	R-CARBON - 1/4W 12K-J	
R7K24	103P713080	R-CARBON - 1/4W 12K-J	
R7K25	103P713080	R-CARBON - 1/4W 12K-J	
R7K26	103P715030	R-CARBON - 1/4W 220K-J	
R7K27	103P713070	R-CARBON - 1/4W 10K-J	
R7K28	103P711050	R-CARBON - 1/4W 150-J	
R7K29	103P712060	R-CARBON - 1/4W 1.2K-J	
R7K30	103P713070	R-CARBON - 1/4W 10K-J	
R7K31	103P715030	R-CARBON - 1/4W 220K-J	
R7K32	103P713030	R-CARBON - 1/4W 4.7K-J	
R7K34	103P713000	R-CARBON - 1/4W 2.7K-J	
R7K35	103P711030	R-CARBON - 1/4W 100-J	
R7K36	103P710090	R-CARBON - 1/4W 47-J	
R8C02	103P713010	R-CARBON - 1/4W 3.3K-J	
R8C03	103P711090	R-CARBON - 1/4W 330-J	
R8C05	103C288070	R-METAL-CP - 2W 3.9-J	
R8C06	103C288070	R-METAL-CP - 2W 3.9-J	
R8C07	103C391050	R-METAL-P - 3W 150-J	
R8C10	103P713010	R-CARBON - 1/4W 3.3K-J	
R8C11	103P711090	R-CARBON - 1/4W 330-J	
R8C13	103C288070	R-METAL-CP - 2W 3.9-J	
R8C14	103C288070	R-METAL-CP - 2W 3.9-J	
R8C15	103C391050	R-METAL-P - 3W 150-J	
R8C18	103P713010	R-CARBON - 1/4W 3.3K-J	
R8C19	103P711090	R-CARBON - 1/4W 330-J	
R8C21	103C288070	R-METAL-CP - 2W 3.9-J	
R8C22	103C288070	R-METAL-CP - 2W 3.9-J	
R8C23	103C391050	R-METAL-P - 3W 150-J	
R8C26	103P713010	R-CARBON - 1/4W 3.3K-J	
R8C27	103P711090	R-CARBON - 1/4W 330-J	
R8C29	103C288070	R-METAL-CP - 2W 3.9-J	
R8C30	103C288070	R-METAL-CP - 2W 3.9-J	
R8C31	103C391050	R-METAL-P - 3W 150-J	
R8C34	103P713010	R-CARBON - 1/4W 3.3K-J	
R8C35	103P711090	R-CARBON - 1/4W 330-J	
R8C37	103C288070	R-METAL-CP - 2W 3.9-J	
R8C38	103C288070	R-METAL-CP - 2W 3.9-J	
R8C39	103C391050	R-METAL-P - 3W 150-J	
R8C42	103P713010	R-CARBON - 1/4W 3.3K-J	
R8C43	103P711090	R-CARBON - 1/4W 330-J	
R8C45	103C288070	R-METAL-CP - 2W 3.9-J	
R8C46	103C288070	R-METAL-CP - 2W 3.9-J	
R8C47	103C391050	R-METAL-P - 3W 150-J	
R8C60	103C191090	R-METAL - 3W 330-J	
R8C61	103C191090	R-METAL - 3W 330-J	
R8C62	103P713010	R-CARBON - 1/4W 3.3K-J	
R8C63	103P713010	R-CARBON - 1/4W 3.3K-J	
R8C64	103P713010	R-CARBON - 1/4W 3.3K-J	
R8C65	103P713010	R-CARBON - 1/4W 3.3K-J	
R8C66	103P713010	R-CARBON - 1/4W 3.3K-J	
R8C67	103P713010	R-CARBON - 1/4W 3.3K-J	
R8P03	103P711070	R-CARBON - 1/4W 220-J	defgh
R8P03	103P712010	R-CARBON - 1/4W 470-J	abc
R8P03	103P712080	R-CARBON - 1/4W 1.8K-J	ijk
R8P04	103P711070	R-CARBON - 1/4W 220-J	
R8P05	103P711070	R-CARBON - 1/4W 220-J	abcdefgij
R8P05	103P712010	R-CARBON - 1/4W 470-J	hk
R8P06	103P711070	R-CARBON - 1/4W 220-J	
R9A02	**102P338040**	**R-CEMENT-WIRE - 15W 2.2-K**	
R9A03	**109C010010**	**R-COMP - 1/2W 1M-K**	
R9A04	103P145020	R-CARBON - 1/2W 180K-J	
R9A05	**109C010010**	**R-COMP - 1/2W 1M-K**	
R9A06	**109C010010**	**R-COMP - 1/2W 1M-K**	
R9A10	103P713020	R-CARBON - 1/4W 3.9K-J	
R9A11	103P712070	R-CARBON - 1/4W 1.5K-J	
R9A12	103P713070	R-CARBON - 1/4W 10K-J	
R9A13	103C181020	R-METAL - 2W 82-J	
R9A14	103P710090	R-CARBON - 1/4W 47-J	
R9A15	103P142070	R-CARBON - 1/2W 1.5K-J	
R9A16	103P712050	R-CARBON - 1/4W 1K-J	
R9A17	103P713070	R-CARBON - 1/4W 10K-J	
R9A18	103P713000	R-CARBON - 1/4W 2.7K-J	
R9A19	103P713070	R-CARBON - 1/4W 10K-J	
R9A20	103P713010	R-CARBON - 1/4W 3.3K-J	
R9A21	103C393090	R-METAL-P - 3W 15K-J	
R9A22	103P710010	R-CARBON - 1/4W 10-J	
R9A23	103P710070	R-CARBON - 1/4W 33-J	

[#] Model Legend:
(a) WS-48513, (b) WS-48613, (c) WS-55513, (d) WS-55613, (e) WS-55813, (f) WS-65513, (g) WS-65613, (h) WS-65713, (i) WS-65813, (j) WS-73513, (k) WS-73713

Ref #	Part #	Part Name & Description	[#]
R9A24	103P713040	R-CARBON - 1/4W 5.6K-J	
R9A25	103P713010	R-CARBON - 1/4W 3.3K-J	
R9A26	103P712030	R-CARBON - 1/4W 680-J	
R9A27	103C187050	R-METAL - 2W 0.39-J	
R9A28	103P712020	R-CARBON - 1/4W 560-J	
R9A29	103C187050	R-METAL - 2W 0.39-J	
R9A30	103P712090	R-CARBON - 1/4W 2.2K-J	
R9A31	103P712050	R-CARBON - 1/4W 1K-J	
R9A32	103P713070	R-CARBON - 1/4W 10K-J	
R9A33	103P711030	R-CARBON - 1/4W 100-J	
R9A34	103P710050	R-CARBON - 1/4W 22-J	
R9A35	103P715010	R-CARBON - 1/4W 150K-J	
R9A36	103P714090	R-CARBON - 1/4W 100K-J	
R9A37	103P712090	R-CARBON - 1/4W 2.2K-J	
R9A38	103P713000	R-CARBON - 1/4W 2.7K-J	
R9A39	103P711030	R-CARBON - 1/4W 100-J	
R9A40	103P712010	R-CARBON - 1/4W 470-J	
R9A41	103P712050	R-CARBON - 1/4W 1K-J	
R9A42	103P712020	R-CARBON - 1/4W 560-J	
R9A43	103P464090	R-METAL - 1/4W 10K-F	
R9A44	103P463040	R-METAL - 1/4W 2.4K-F	
R9A45	103P713070	R-CARBON - 1/4W 10K-J	
R9A46	103P710090	R-CARBON - 1/4W 47-J	
R9A47	103P715050	R-CARBON - 1/4W 330K-J	
R9A48	103P332050	R-CARBON - 1/4W 33-J	
R9A49	103P145020	R-CARBON - 1/2W 180K-J	
R9A50	103P413070	R-CARBON - 1/4W 10K-J	
R9A51	103P715050	R-CARBON - 1/4W 330K-J	
R9A52	103P710090	R-CARBON - 1/4W 47-J	
R9A53	103P712030	R-CARBON - 1/4W 680-J	
R9A54	109P175020	R-WIRE - 2W 0.15-J	
R9A55	109P175010	R-WIRE - 2W 0.12-J	
R9A57	103P712090	R-CARBON - 1/4W 2.2K-J	
R9A58	103P710010	R-CARBON - 1/4W 10-J	
R9A59	103P710020	R-CARBON - 1/4W 12-J	
R9A60	103P714050	R-CARBON - 1/4W 47K-J	
R9A61	103P713040	R-CARBON - 1/4W 5.6K-J	
R9A62	103P713070	R-CARBON - 1/4W 10K-J	
R9A63	103P713020	R-CARBON - 1/4W 3.9K-J	
R9A66	103P713070	R-CARBON - 1/4W 10K-J	
R9A67	103P710050	R-CARBON - 1/4W 22-J	
R9A68	103C180050	R-METAL - 2W 22-J	
R9A69	103C180050	R-METAL - 2W 22-J	
R9A70	103P330070	R-CARBON - 1/4W 33-J	
R9A71	103P145030	R-CARBON - 1/2W 220K-J	
R9A73	103P412050	R-CARBON - 1/4W 1K-J	
R9A74	103P144020	R-CARBON - 1/2W 27K-J	
R9A75	103P714090	R-CARBON - 1/4W 100K-J	
R9A77	103P714090	R-CARBON - 1/4W 100K-J	
R9A78	103P711030	R-CARBON - 1/4W 100-J	
R9A79	103P711030	R-CARBON - 1/4W 100-J	
R9A80	103P713020	R-CARBON - 1/4W 3.9K-J	
R9A81	103P713070	R-CARBON - 1/4W 10K-J	
R9A84	103P713080	R-CARBON - 1/4W 12K-J	
R9A85	103P712090	R-CARBON - 1/4W 2.2K-J	
R9A90	103P145050	R-CARBON - 1/2W 330K-J	
R9A91	103P145050	R-CARBON - 1/2W 330K-J	
R9A92	103P714020	R-CARBON - 1/4W 27K-J	
R9C22	103C398050	R-METAL-P - 3W 2.7-K	
R9C25	103C398020	R-METAL-P - 3W 1.5-K	
R9C26	103C398010	R-METAL-P - 3W 1.2-K	
R9D00	**109D036020**	**R-COMP - 1/2W 4.7M-K**	

CAPACITORS

CHIP Type Capacitors (Listed by Value)

Part No.	Value	Part No.	Value
154P340010	CK50V 1P-C	141P141010	B50V 1500P-K
154P340030	CK50V 2P-C	141P141030	B50V 2200P-K
154P340040	50V 3P-C	141P141070	B50V 4700P-K
154P351020	SL50V 10P-J	172P391030	16V 0.01M-J
154P341010	CH50V 10P-C	141P142010	B50V 0.01M-K
154P341030	CH50V 12P-J	141P142090	B25V 0.047M-K
154P321040	SL50V 12P-J	141P143010	B25V 0.068M-K
154P341050	CH50V 15P-J	141P143020	B16V 0.082M-K
154P341090	CH50V 22P-J	141P143030	B16V 0.1M-K
154P342010	CH50V 27P-J	141P139030	B25V 0.1M-K
154P342030	CH50V 33P-J	141P139070	B16V 0.22M-K
154P342050	CH50V 39P-J	141P138080	B25V 0.33M-K
154P345010	CH50V 470P-J	141P139090	B16V 0.47M-K
154P342070	CH50V 47P-J	141P146080	B10V 0.47M-K
154P342090	CH50V 56P-J	141P134070	B16V 1M-K
154P353000	SL50V 56P-J	141P147020	B10V/6.3V 1M-K
154P343030	CH50V 82P-J	181P526010	50V 1M-M
154P343050	CH50V 100P-J	181P526020	50V 2.2M-M
154P343070	CH50V 120P-J	141P133010	B10V 3.3M-M
154P343090	CH50V 150P-J	181P532030	16V 10M-M
154P344010	CH50V 180P-J	181P522030	16V 10M-M 105C
154P344030	CH50V 220P-J	181P515000	35V 10M-M
141P140010	B50V 220P-K	181P525000	35V 10M-M 105C
141P130010	B50V 220P-K	181P525010	35V 22M-M 105C
154P344050	CH50V 270P-J	181P500030	6.3V 47M-M
154P355000	SL50V 390P-J	181P520030	6.3V 47M-M
154P355020	SL50V 470P-J	181P522060	6V 47M-M
141P140050	B50V 470P-K	181P530030	6.3V 47M-M
154P345030	CH25V 560P-J	181P502070	16V 100M-M
154P345070	CH25V 820P-J	181P520040	6.3V 100M-M
141P140090	B50V 1000P-K	181P528010	4V 220M-M 105C
154P345090	CH25V 1000P-J	181P520050	6.3V 220M-M 105C
141P143050	F50V 1000P-Z/B50V 1000P-K		

CAPACITORS AND TRIMMERS

Conventional Capacitors (By Ref #)

Ref #	Part #	Part Name & Description	[#]
C1A10	181P352040	C-ELEC - 16V 100M-M	
C1A12	181P124040	C-ELEC-NP - 50V 10M-M	
C1A23	172P262010	C-M-POLY - 50V 0.047M-J	
C1A24	181P210040	C-ELEC - 04W 6.3V 100M-M	
C1B10	181P352040	C-ELEC - 16V 100M-M	
C1B12	181P124040	C-ELEC-NP - 50V 10M-M	
C1B23	172P262010	C-M-POLY - 50V 0.047M-J	
C1B24	181P210040	C-ELEC - 04W 6.3V 100M-M	
C2A06	181P352040	C-ELEC - 16V 100M-M	
C2A24	181P352040	C-ELEC - 16V 100M-M	
C2A66	181P352040	C-ELEC - 16V 100M-M	
C2A68	181P352040	C-ELEC - 16V 100M-M	

[#] Model Legend:

(a) WS-48513, (b) WS-48613, (c) WS-55513, (d) WS-55613, (e) WS-55813, (f) WS-65513, (g) WS-65613, (h) WS-65713, (i) WS-65813, (j) WS-73513, (k) WS-73713

Ref #	Part #	Part Name & Description	[#]
C2A95	181P352040	C-ELEC - 16V 100M-M	
C2B01	181P352040	C-ELEC - 16V 100M-M	
C2B24	181P352040	C-ELEC - 16V 100M-M	
C2B70	181P352040	C-ELEC - 16V 100M-M	
C2B90	181P352040	C-ELEC - 16V 100M-M	
C2E01	181P352030	C-ELEC - 16V 47M-M	
C2E02	181P355050	C-ELEC - 50V 10M-M	
C2E21	181P355050	C-ELEC - 50V 10M-M	
C2E22	181P355050	C-ELEC - 50V 10M-M	
C2E23	181P352040	C-ELEC - 16V 100M-M	
C2E39	181P352030	C-ELEC - 16V 47M-M	
C2E49	181P355050	C-ELEC - 50V 10M-M	
C2E65	181P352040	C-ELEC - 16V 100M-M	
C2E67	181P352040	C-ELEC - 16V 100M-M	
C2E92	181P355050	C-ELEC - 50V 10M-M	
C2F00	181P352070	C-ELEC - 16V 470M-M	
C2F10	181P352040	C-ELEC - 16V 100M-M	
C2F11	181P351040	C-ELEC - 10V 100M-M	
C2F32	181P352040	C-ELEC - 16V 100M-M	
C2F60	181P352030	C-ELEC - 16V 47M-M	
C2F64	181P352010	C-ELEC - 16V 22M-M	
C2F80	181P355080	C-ELEC - 50V 47M-M	
C2F92	181P352030	C-ELEC - 16V 47M-M	
C2G00	181P352070	C-ELEC - 16V 470M-M	
C2G32	181P352040	C-ELEC - 16V 100M-M	
C2G40	181P352030	C-ELEC - 16V 47M-M	
C2G50	181P352030	C-ELEC - 16V 47M-M	
C2G70	181P352030	C-ELEC - 16V 47M-M	
C2G72	181P352030	C-ELEC - 16V 47M-M	
C2H01	181P352050	C-ELEC - 16V 220M-M	
C2H03	181P352050	C-ELEC - 16V 220M-M	
C2H29	181P352040	C-ELEC - 16V 100M-M	
C2H49	181P352050	C-ELEC - 16V 220M-M	
C2J70	181P351050	C-ELEC - 10V 220M-M	
C2J71	181P351070	C-ELEC - 10V 470M-M	
C2J72	181P351070	C-ELEC - 10V 470M-M	
C2J73	181P352040	C-ELEC - 16V 100M-M	
C2J75	181P122090	C-ELEC-NP - 25V 22M-M	
C2J76	181P122090	C-ELEC-NP - 25V 22M-M	
C2J77	181P355060	C-ELEC - 50V 22M-M	
C2J78	181P355060	C-ELEC - 50V 22M-M	
C2K01	181P219010	C-ELEC - 16V 10M-M	
C2K03	181P219010	C-ELEC - 16V 10M-M	
C2K08	181P219010	C-ELEC - 16V 10M-M	
C2K10	181P219010	C-ELEC - 16V 10M-M	
C2K24	181P219010	C-ELEC - 16V 10M-M	
C2K32	181P352040	C-ELEC - 16V 100M-M	
C2K50	181P219010	C-ELEC - 16V 10M-M	
C2K52	181P122070	C-ELEC-NP - 25V 10M-M	
C2K54	181P122070	C-ELEC-NP - 25V 10M-M	
C2K80	181P352030	C-ELEC - 16V 47M-M	
C2L01	181P219010	C-ELEC - 16V 10M-M	
C2L03	181P219010	C-ELEC - 16V 10M-M	
C2L08	181P219010	C-ELEC - 16V 10M-M	
C2L10	181P219010	C-ELEC - 16V 10M-M	
C2L15	181P219010	C-ELEC - 16V 10M-M	
C2L17	181P219010	C-ELEC - 16V 10M-M	
C2L35	181P352040	C-ELEC - 16V 100M-M	

Ref #	Part #	Part Name & Description	[#]
C2L49	181P122070	C-ELEC-NP - 25V 10M-M	
C2L50	181P219010	C-ELEC - 16V 10M-M	
C2L60	181P122070	C-ELEC-NP - 25V 10M-M	
C2L63	181P122070	C-ELEC-NP - 25V 10M-M	
C2V17	181P355040	C-ELEC - 50V 4.7M-M	
C2V19	181P351070	C-ELEC - 10V 470M-M	
C2V29	181P352040	C-ELEC - 16V 100M-M	
C2V48	172P166030	C-TF - 50V 0.1M-J	
C2V49	172P166030	C-TF - 50V 0.1M-J	
C2V57	181P352030	C-ELEC - 16V 47M-M	
C2W02	181P352080	C-ELEC - 16V 1000M-M	
C2W04	181P352050	C-ELEC - 16V 220M-M	
C2W05	181P352050	C-ELEC - 16V 220M-M	
C2W08	181P352050	C-ELEC - 16V 220M-M	
C2W09	181P352050	C-ELEC - 16V 220M-M	
C2W16	181P219010	C-ELEC - 16V 10M-M	
C2W17	181P352050	C-ELEC - 16V 220M-M	
C2X03	181P352030	C-ELEC - 16V 47M-M	
C2X10	181P352030	C-ELEC - 16V 47M-M	
C3A13	181P352030	C-ELEC - 16V 47M-M	
C3A22	181P352030	C-ELEC - 16V 47M-M	
C3A29	181P352030	C-ELEC - 16V 47M-M	
C3A30	181P352030	C-ELEC - 16V 47M-M	
C3A32	181P219010	C-ELEC - 16V 10M-M	
C3A34	181P355030	C-ELEC - 50V 3.3M-M	
C3A47	181P219010	C-ELEC - 16V 10M-M	
C3A52	181P352030	C-ELEC - 16V 47M-M	
C3E01	**181P354050**	**C-ELEC - 35V 47M-M**	
C3E02	181P355010	C-ELEC - 50V 1M-M	
C3E03	172P331010	C-POLY - 50V 6800P-J	
C3E04	181P355010	C-ELEC - 50V 1M-M	
C3E05	172P331010	C-POLY - 50V 6800P-J	
C3E06	181P355050	C-ELEC - 50V 10M-M	
C3E07	181P353090	C-ELEC - 5V 2200M-M	
C3E08	141P197080	C-CER - F50V 0.1M-Z	
C3E09	172P262050	C-M-POLY - 50V 0.1M-J	
C3E11	172P262050	C-M-POLY - 50V 0.1M-J	
C3E12	172P262050	C-M-POLY - 50V 0.1M-J	
C3E14	172P262050	C-M-POLY - 50V 0.1M-J	
C3E20	189D180010	C-ELEC-NP - 50V 6.8M-K	hk
C3E21	189D180010	C-ELEC-NP - 50V 6.8M-K	hk
C4B01	**172P261030**	**C-M-POLY - 50V 0.01M-J**	
C4B02	181P358000	C-ELEC - 35V 1000M-M	
C4B03	172P383030	C-M-POLY - 100V 0.47M-K	
C4B04	181P354060	C-ELEC - 35V 100M-M	
C4B06	172P330090	C-POLY - 50V 4700P-J	ijk
C4B06	172P331070	C-POLY - 50V 0.022M-J	abcdefgh
C4B07	172P383030	C-M-POLY - 100V 0.47M-K	
C4B08	172P263070	C-M-POLY - 50V 1.0M-J	
C4B09	181P355060	C-ELEC - 50V 22M-M	
C4B10	181P354050	C-ELEC - 35V 47M-M	
C4B11	181P353090	C-ELEC - 5V 2200M-M	
C5200	181P184020	C-ELEC - 35V 100M-M	
C5203	181P352060	C-ELEC - 16V 330M-M	
C5205	181P352060	C-ELEC - 16V 330M-M	
C5207	181P352060	C-ELEC - 16V 330M-M	
C5209	181P352060	C-ELEC - 16V 330M-M	
C5213	181P353060	C-ELEC - 25V 330M-M	

[#] Model Legend:

(a) WS-48513, (b) WS-48613, (c) WS-55513, (d) WS-55613, (e) WS-55813, (f) WS-65513, (g) WS-65613, (h) WS-65713, (i) WS-65813, (j) WS-73513, (k) WS-73713

Ref #	Part #	Part Name & Description	[#]
C5215	181P353060	C-ELEC - 25V 330M-M	
C5218	181P350060	C-ELEC - 3V 1000M-M	
C5301	**141P143030**	**C-CER-CHIP - B16V 0.1M-K**	
C5A01	181P354050	C-ELEC - 35V 47M-M	
C5A02	181P355050	C-ELEC - 50V 10M-M	
C5A03	**142P020090**	**C-CER - B50V 1000P-K**	
C5A04	172P263010	C-M-POLY - 50V 0.33M-J	
C5A05	172P262010	C-M-POLY - 50V 0.047M-J	
C5A10	189D186010	C-ELEC - 160V 22M-M/Q	
C5A12	181P354090	C-ELEC - 35V 470M-M	
C5A15	181P354060	C-ELEC - 35V 100M-M	
C5A16	142P023080	C-CER - BF50V 0.01M-Z	
C5A17	142P020090	C-CER - B50V 1000P-K	
C5A18	142P024060	C-CER - BF50V 0.1M-Z	
C5A19	142P020090	C-CER - B50V 1000P-K	
C5A21	172P262050	C-M-POLY - 50V 0.1M-J	
C5A22	181P355050	C-ELEC - 50V 10M-M	
C5A23	181P355050	C-ELEC - 50V 10M-M	
C5A31	172P581020	C-M-PLA-PP - 1800VHP 3000P-J-OR-H	abc
C5A31	172P581030	C-M-PLA-PP - 1800V 3300P-J	defghijk
C5A32	172P581010	C-M-PLA-PP - 1800VHP 2700P-J	abc
C5A32	172P581030	C-M-PLA-PP - 1800V 3300P-J	defghijk
C5A34	154P262050	C-CER - R2KV 560P-K	
C5A35	142P012010	C-CER - B500V 4700P-K	
C5A36	172P524010	C-M-POLY - 250V 2.2M-J	
C5A37	172P436050	C-M-PLA-PP - 250V 0.47M-J	abc
C5A37	172P436070	C-M-PLA-PP - 250V 0.56M-J	defghijk
C5A39	142P011030	C-CER - B500V 1000P-K	
C5A40	142P011000	C-CER - B500V 560P-K	
C5A41	181P182030	C-ELEC - 16V 1000M-M 105C	
C5A43	181P190050	C-ELEC - 160V 1M-M/Q	
C5A51	**154P260010**	**C-CER - R1KV 220P-K**	
C5A52	**172P580090**	**C-M-PLA-PP - 1800V 2200P-J**	
C5A54	189D186010	C-ELEC - 160V 22M-M/Q	
C5A55	172P088060	C-PLA-PP - 630V 6800P-J	
C5A56	181P352030	C-ELEC - 16V 47M-M	
C5A58	142P024060	C-CER - BF50V 0.1M-Z	
C5A59	142P023080	C-CER - BF50V 0.01M-Z	
C5A60	172P262050	C-M-POLY - 50V 0.1M-J	
C5A61	181P355040	C-ELEC - 50V 4.7M-M	
C5A62	142P023080	C-CER - BF50V 0.01M-Z	
C5A63	142P023080	C-CER - BF50V 0.01M-Z	
C5A64	181P352010	C-ELEC - 16V 22M-M	
C5A65	181P355050	C-ELEC - 50V 10M-M	
C5A66	142P024060	C-CER - BF50V 0.1M-Z	
C5A67	142P023080	C-CER - BF50V 0.01M-Z	
C5A68	181P123070	C-ELEC-NP - 50V 0.47M-M	
C5A69	142P024060	C-CER - BF50V 0.1M-Z	
C5A70	172P264010	C-M-POLY - 50V 2.2M-J	
C5A71	172P262060	C-M-POLY - 50V 0.12M-J	
C5A72	181P355010	C-ELEC - 50V 1M-M	
C5B10	181P354060	C-ELEC - 35V 100M-M	
C5B11	142P026010	C-CER - BB16V 0.01M-M	
C5B20	189D186010	C-ELEC - 160V 22M-M/Q	
C5B30	181P352070	C-ELEC - 16V 470M-M	
C5B31	181P352030	C-ELEC - 16V 47M-M	
C5C50	142P024060	C-CER - BF50V 0.1M-Z	
C5C57	172P262070	C-M-POLY - 50V 0.15M-J	

Ref #	Part #	Part Name & Description	[#]
C5H01	181P352060	C-ELEC - 16V 330M-M	
C5H02	142P023090	C-CERAMIC - BF50V 0.022M-Z	
C5H04	155P232070	C-CER - CH50V 47P-J	
C5H12	142P023080	C-CER - BF50V 0.01M-Z	
C5H16	172P186030	C-PLA-PP - 200V 0.01M-K	
C5H17	172P261030	C-M-POLY - 50V 0.01M-J	
C5H19	181P183010	C-ELEC - 25V 100M-M	
C5H20	181P352040	C-ELEC - 16V 100M-M	
C5H21	181P780080	C-ELEC - 160V 33M-M 105C	
C5H24	181P192060	C-ELEC - 200V 22M-M/Q	
C5K00	189P203010	C-M-PLA-PP - 1500VHP 0.015M-J	
C5K01	189P203010	C-M-PLA-PP - 1500VHP 0.015M-J	
C5K02	181P198040	C-ELEC - 450V 4.7M-M/Q	
C5K03	181P352040	C-ELEC - 16V 100M-M	
C5K04	181P355080	C-ELEC - 50V 47M-M	
C5K05	181P354060	C-ELEC - 35V 100M-M	
C5K12	181P352040	C-ELEC - 16V 100M-M	
C5K14	181P352030	C-ELEC - 16V 47M-M	
C5K15	181P191000	C-ELEC - 160V 22M-M/Q	
C5K16	172P331010	C-POLY - 50V 6800P-J	
C6B01	**155P231050**	**C-CER - CH50V 15P-J**	
C6B02	181P195050	C-ELEC - 350V 10M-M/Q	
C6B03	155P231090	C-CER - CH50V 22P-J	
C6B04	142P023080	C-CER - BF50V 0.01M-Z	
C6B05	181P352030	C-ELEC - 16V 47M-M	
C6B06	142P024060	C-CER - BF50V 0.1M-Z	
C6B09	142P023080	C-CER - BF50V 0.01M-Z	
C6B10	172P532050	C-M-POLY - 400V 0.1M-J	
C6B12	154P405000	C-CER - B3KV 1000P-K	
C6B13	142P012010	C-CER - B500V 4700P-K	
C6B14	154P405000	C-CER - B3KV 1000P-K	
C6B15	142P023080	C-CER - BF50V 0.01M-Z	
C6B16	154P260050	C-CER - R1KV 1000P-K	
C6B18	154P260050	C-CER - R1KV 1000P-K	
C6B20	181P355050	C-ELEC - 50V 10M-M	
C6B22	154P405000	C-CER - B3KV 1000P-K	
C6G01	**155P231050**	**C-CER - CH50V 15P-J**	
C6G02	181P195050	C-ELEC - 350V 10M-M/Q	
C6G03	155P232010	C-CER - CH50V 27P-J	
C6G04	142P023080	C-CER - BF50V 0.01M-Z	
C6G05	181P352030	C-ELEC - 16V 47M-M	
C6G06	142P024060	C-CER - BF50V 0.1M-Z	
C6G08	155P232050	C-CER - CH50V 39P-J	
C6G09	142P023080	C-CER - BF50V 0.01M-Z	
C6G10	172P532050	C-M-POLY - 400V 0.1M-J	
C6G12	154P405000	C-CER - B3KV 1000P-K	
C6G13	142P012010	C-CER - B500V 4700P-K	
C6G14	154P405000	C-CER - B3KV 1000P-K	
C6G15	142P023080	C-CER - BF50V 0.01M-Z	
C6G16	154P260050	C-CER - R1KV 1000P-K	
C6G18	154P260050	C-CER - R1KV 1000P-K	
C6G20	181P355050	C-ELEC - 50V 10M-M	
C6G22	154P405000	C-CER - B3KV 1000P-K	
C6R01	**155P231050**	**C-CER - CH50V 15P-J**	
C6R02	181P195050	C-ELEC - 350V 10M-M/Q	
C6R03	155P231090	C-CER - CH50V 22P-J	
C6R04	142P023080	C-CER - BF50V 0.01M-Z	
C6R05	181P352030	C-ELEC - 16V 47M-M	

[#] Model Legend:

(a) WS-48513, (b) WS-48613, (c) WS-55513, (d) WS-55613, (e) WS-55813, (f) WS-65513, (g) WS-65613, (h) WS-65713, (i) WS-65813, (j) WS-73513, (k) WS-73713

Ref #	Part #	Part Name & Description	[#]
C6R06	142P024060	C-CER - BF50V 0.1M-Z	
C6R09	142P023080	C-CER - BF50V 0.01M-Z	
C6R10	172P532050	C-M-POLY - 400V 0.1M-J	
C6R12	154P405000	C-CER - B3KV 1000P-K	
C6R13	142P012010	C-CER - B500V 4700P-K	
C6R14	154P405000	C-CER - B3KV 1000P-K	
C6R15	142P023080	C-CER - BF50V 0.01M-Z	
C6R18	154P260050	C-CER - R1KV 1000P-K	
C6R20	181P355050	C-ELEC - 50V 10M-M	
C6R22	154P405000	C-CER - B3KV 1000P-K	
C7004	181P182020	C-ELEC - 16V 470M-M 105C	
C7047	181P351070	C-ELEC - 10V 470M-M	
C7049	181P355090	C-ELEC - 50V 100M-M	
C7A00	**141P140090**	**C-CER-CHIP - B50V 1000P-K**	
C7B99	181P352030	C-ELEC - 16V 47M-M	
C7C00	181P351040	C-ELEC - 10V 100M-M	
C7C10	181P355090	C-ELEC - 50V 100M-M	
C7C51	181P352050	C-ELEC - 16V 220M-M	
C7C65	181P352050	C-ELEC - 16V 220M-M	
C7C71	181P351040	C-ELEC - 10V 100M-M	
C7C81	181P351040	C-ELEC - 10V 100M-M	
C7C82	181P351040	C-ELEC - 10V 100M-M	
C7C85	181P351040	C-ELEC - 10V 100M-M	
C7C86	181P351040	C-ELEC - 10V 100M-M	
C7C88	181P352030	C-ELEC - 16V 47M-M	
C7C89	181P351040	C-ELEC - 10V 100M-M	
C7K01	181P352030	C-ELEC - 16V 47M-M	
C7K20	155P314040	C-CER - SL50V 220P-J	
C7K21	181P355050	C-ELEC - 50V 10M-M	
C7K23	181P352030	C-ELEC - 16V 47M-M	
C7K25	172P262050	C-M-POLY - 50V 0.1M-J	
C7K26	172P262050	C-M-POLY - 50V 0.1M-J	
C7K27	181P355010	C-ELEC - 50V 1M-M	
C7K28	181P352030	C-ELEC - 16V 47M-M	
C7K30	142P026010	C-CER - BB16V 0.01M-M	
C8C03	181P358000	C-ELEC - 35V 1000M-M	
C8C04	142P024060	C-CER - BF50V 0.1M-Z	
C8C05	181P358000	C-ELEC - 35V 1000M-M	
C8C06	142P024060	C-CER - BF50V 0.1M-Z	
C8C09	155P233090	C-CER - CH50V 150P-J	
C8C11	155P233090	C-CER - CH50V 150P-J	
C8C14	155P233090	C-CER - CH50V 150P-J	
C8C18	181P358000	C-ELEC - 35V 1000M-M	
C8C19	142P024060	C-CER - BF50V 0.1M-Z	
C8C20	181P358000	C-ELEC - 35V 1000M-M	
C8C21	142P024060	C-CER - BF50V 0.1M-Z	
C8C23	155P233090	C-CER - CH50V 150P-J	
C8C26	155P233090	C-CER - CH50V 150P-J	
C8C29	155P233090	C-CER - CH50V 150P-J	
C8C43	142P020080	C-CER - B50V 820P-K	
C8C44	142P020080	C-CER - B50V 820P-K	
C8C45	142P020080	C-CER - B50V 820P-K	
C8C46	142P020080	C-CER - B50V 820P-K	
C8C47	142P020080	C-CER - B50V 820P-K	
C8C48	142P020080	C-CER - B50V 820P-K	
C8D16	181P352030	C-ELEC - 16V 47M-M	
C8D19	181P352030	C-ELEC - 16V 47M-M	
C8D20	181P352030	C-ELEC - 16V 47M-M	
C8D21	181P352030	C-ELEC - 16V 47M-M	
C8D22	181P352030	C-ELEC - 16V 47M-M	
C8D29	181P355010	C-ELEC - 50V 1M-M	
C8D30	181P352030	C-ELEC - 16V 47M-M	
C8D31	181P352030	C-ELEC - 16V 47M-M	
C8D33	181P352030	C-ELEC - 16V 47M-M	
C8D39	181P352030	C-ELEC - 16V 47M-M	
C8D40	181P352030	C-ELEC - 16V 47M-M	
C8E01	181P352030	C-ELEC - 16V 47M-M	
C8E03	181P352030	C-ELEC - 16V 47M-M	
C8E05	181P352030	C-ELEC - 16V 47M-M	
C8E07	181P352030	C-ELEC - 16V 47M-M	
C8E09	181P352030	C-ELEC - 16V 47M-M	
C8E12	181P352030	C-ELEC - 16V 47M-M	
C8E14	181P352030	C-ELEC - 16V 47M-M	
C8E16	181P352030	C-ELEC - 16V 47M-M	
C8G00	181P352030	C-ELEC - 16V 47M-M	
C8G03	181P352020	C-ELEC - 16V 33M-M	
C8G05	181P352030	C-ELEC - 16V 47M-M	
C8G06	181P352030	C-ELEC - 16V 47M-M	
C8G09	181P352030	C-ELEC - 16V 47M-M	
C8G55	181P352030	C-ELEC - 16V 47M-M	
C8G60	172P263070	C-M-POLY - 50V 1.0M-J	
C9A05	**189P185070**	**C-CER - AC250V E1000P-M**	
C9A06	**189P185070**	**C-CER - AC250V E1000P-M**	
C9A07	**189P153040**	**C-M-POLY - 250VAC 0.1M-M**	
C9A08	**189P185090**	**C-CER - AC250V E2200P-M**	
C9A09	**189P185090**	**C-CER - AC250V E2200P-M**	
C9A10	**189P185090**	**C-CER - AC250V E2200P-M**	
C9A11	**189P185090**	**C-CER - AC250V E2200P-M**	
C9A12	185D122050	C-ELEC - H200V 1000M-M 105C	
C9A13	**189P152070**	**C-M-POLY - 250VAC 0.01M-M**	
C9A14	**189P152070**	**C-M-POLY - 250VAC 0.01M-M**	
C9A15	189P185090	C-CER - AC250V E2200P-M	
C9A20	**189P152070**	**C-M-POLY - 250VAC 0.01M-M**	
C9A21	**181P355080**	**C-ELEC - 50V 47M-M**	
C9A22	**154P260050**	**C-CER - R1KV 1000P-K**	
C9A23	181P354050	C-ELEC - 35V 47M-M	
C9A24	142P020050	C-CER - B50V 470P-K	
C9A25	155P239000	C-CER - CH50V 180P-J	
C9A26	142P023080	C-CER - BF50V 0.01M-Z	
C9A27	181P355050	C-ELEC - 50V 10M-M	
C9A28	181P355050	C-ELEC - 50V 10M-M	
C9A29	142P010090	C-CER - B500V 470P-K	
C9A30	181P734000	C-ELEC - 16V 2200M-M 105C	
C9A31	181P734000	C-ELEC - 16V 2200M-M 105C	
C9A32	142P024060	C-CER - BF50V 0.1M-Z	
C9A33	181P743070	C-ELEC - 16V 1000M-M	
C9A34	142P023080	C-CER - BF50V 0.01M-Z	
C9A35	181P352040	C-ELEC - 16V 100M-M	
C9A36	142P010090	C-CER - B500V 470P-K	
C9A37	181P732000	C-ELEC - 10V 680M-M 105C	
C9A38	181P732000	C-ELEC - 10V 680M-M 105C	
C9A40	181P352040	C-ELEC - 16V 100M-M	
C9A41	142P026010	C-CER - BB16V 0.01M-M	
C9A42	181P352040	C-ELEC - 16V 100M-M	
C9A43	172P261030	C-M-POLY - 50V 0.01M-J	

[#] Model Legend:

(a) WS-48513, (b) WS-48613, (c) WS-55513, (d) WS-55613, (e) WS-55813, (f) WS-65513, (g) WS-65613, (h) WS-65713, (i) WS-65813, (j) WS-73513, (k) WS-73713

Ref #	Part #	Part Name & Description	[#]
C9A44	142P023080	C-CER - BF50V 0.01M-Z	
C9A50	**142P020050**	**C-CER - B50V 470P-K**	
C9A51	**181P355090**	**C-ELEC - 50V 100M-M**	
C9A52	154P400070	C-CER - B1KV 2200P-K	
C9A53	185D122050	C-ELEC - H200V 1000M-M 105C	
C9A54	154P260080	C-CER - R1KV 3300P-K	
C9A55	172P339070	C-POLY - 50V 560P-J	
C9A56	181P355080	C-ELEC - 50V 47M-M	
C9A57	142P010090	C-CER - B500V 470P-K	
C9A58	185D163020	C-ELEC - H50V 4700M-M 105C	
C9A59	185D122050	C-ELEC - H200V 1000M-M 105C	
C9A60	154P400030	C-CER - B1KV 470P-K	
C9A61	142P010090	C-CER - B500V 470P-K	
C9A62	189D183010	C-ELEC - 400V 100M-KC	
C9A63	185D121020	C-ELEC - H180V 470M-M 105C	
C9A64	181P190090	C-ELEC - 160V 10M-M/Q	
C9A65	181P194000	C-ELEC - 250V 10M-M/Q	
C9A66	142P012050	C-CER - B500V 0.01M-K	
C9A67	142P012050	C-CER - B500V 0.01M-K	
C9A68	142P010090	C-CER - B500V 470P-K	
C9A69	181P737000	C-ELEC - 35V 1000M-M 105C	
C9A70	142P023080	C-CER - BF50V 0.01M-Z	
C9A71	142P023080	C-CER - BF50V 0.01M-Z	
C9A73	181P737000	C-ELEC - 35V 1000M-M 105C	
C9A74	142P010090	C-CER - B500V 470P-K	
C9A75	181P355050	C-ELEC - 50V 10M-M	
C9A76	142P023080	C-CER - BF50V 0.01M-Z	
C9A79	142P026010	C-CER - BB16V 0.01M-M	
C9A80	142P026010	C-CER - BB16V 0.01M-M	
C9A81	172P181030	C-PLA-PP - 200V 0.01M-J	
C9A82	142P024060	C-CER - BF50V 0.1M-Z	
C9A85	181P199080	C-ELEC - 200V 47M-M/Q	
C9A86	154P270050	C-CER - SL1KV 22P-J	
C9A87	172P262050	C-M-POLY - 50V 0.1M-J	
C9A88	172P262050	C-M-POLY - 50V 0.1M-J	
C9A89	142P010090	C-CER - B500V 470P-K	
C9A90	181P743060	C-ELEC - 16V 680M-M	
C9A91	181P352040	C-ELEC - 16V 100M-M	
C9A93	181P355010	C-ELEC - 50V 1M-M	
C9A95	181P352070	C-DELE - 16V 470M-M	
C9B01	181P182030	C-ELEC - 16V 1000M-M 105C	
C9B10	181P182030	C-ELEC - 16V 1000M-M 105C	
C9B11	181P182030	C-ELEC - 16V 1000M-M 105C	
C9C25	181P352030	C-ELEC - 16V 47M-M	
C9C27	181P352050	C-ELEC - 16V 220M-M	
C9C30	181P352030	C-ELEC - 16V 47M-M	
C9C32	181P352030	C-ELEC - 16V 47M-M	
C9C35	181P351080	C-ELEC - 10V 1000M-M	
C9C37	181P352030	C-ELEC - 16V 47M-M	
C9C40	181P351070	C-ELEC - 10V 470M-M	
C9C42	181P351070	C-ELEC - 10V 470M-M	
C9C51	181P352030	C-ELEC - 16V 47M-M	
C9C53	181P352030	C-ELEC - 16V 47M-M	
C9D00	**189P153040**	**C-M-POLY - 250VAC 0.1M-M**	
C9D01	**189P153040**	**C-M-POLY - 250VAC 0.1M-M**	
C9D03	189P185090	C-CER - AC250V E2200P-M	
C9D04	189P185090	C-CER - AC250V E2200P-M	
CF2V01	299P259010	OSC-CERAMIC - CSALA2M69G4ZF01-B0 2.69MHZ	

Ref #	Part #	Part Name & Description	[#]
		SWITCHES	
S7L20	432P109010	SW-KEY BOARD - KSHS611BT	
S7L21	432P109010	SW-KEY BOARD - KSHS611BT	
S7L22	432P109010	SW-KEY BOARD - KSHS611BT	
S7L23	432P109010	SW-KEY BOARD - KSHS611BT	
S7L24	432P109010	SW-KEY BOARD - KSHS611BT	
S7L25	432P109010	SW-KEY BOARD - KSHS611BT	
S7L26	432P109010	SW-KEY BOARD - KSHS611BT	
S7L27	432P109010	SW-KEY BOARD - KSHS611BT	
S7L28	432P109010	SW-KEY BOARD - KSHS611BT	
S7L29	432P109010	SW-KEY BOARD - KSHS611BT	
SF5200	296P171010	SAW-FILTER - X6892D	
SF5201	296P170010	SAW-FILTER - X6941D	
		MISCELLANEOUS	
	096Z465030	TAPE-ADHESIVE	cdefghj
AG5K00	224D019040	AIR GAP - 2.0+-0.5KV	
AG9D00	224D019040	AIR GAP - 2.0+-0.5KV	
AG6B01	224D019090	AIR GAP - 1.5+-0.5KV	
AG6G01	224D019090	AIR GAP - 1.5+-0.5KV	
AG6R01	224D019090	AIR GAP - 1.5+-0.5KV	
	246C351030	CORD-AC - POWER	
PC9A10	**268P058020**	**PHOTO-COUPLER - ON3131-R/ON3161-R**	
PC9A20	**268P106010**	**PHOTO-COUPLER - CNZ3133**	
PC9A50	**268P106020**	**PHOTO-COUPLER - CNZ3132**	
F9D00	**283D131040**	**FUSE - S10A 125A**	
F9B00	**283P128050**	**FUSE-CHIP - AC125/100V 4A**	
F9B02	**283P128050**	**FUSE-CHIP - AC125/100V 4A**	
F9A07	**283P144060**	**FUSE - 125V 7A (20N 7000)**	
F5A00	**283P144070**	**FUSE - 125V 3A (20N 3000)**	
F9A08	**283P144070**	**FUSE - 125V 3A (20N 3000)**	
F9A03	**283P144080**	**FUSE - 125V 5A (20N 5000)**	
F9A04	**283P144080**	**FUSE - 125V 5A (20N 5000)**	
F9A05	**283P144080**	**FUSE - 125V 5A (20N 5000)**	
F9A06	**283P144080**	**FUSE - 125V 5A (20N 5000)**	
F9A01	**283P144090**	**FUSE - 125V 10A (20N 10K)**	
F9A02	**283P144090**	**FUSE - 125V 10A (20N 10K)**	
X7J10	285P335050	QTZ-CRYST - 80.000MHZ	
X3A01	285P413010	QTZ-CRYST - 18.432MHZ	
X2F21	285P426010	QTZ-CRYST - 3.579545MHZ	
X2G21	285P426010	QTZ-CRYST - 3.579545MHZ	
X2E47	285P426040	QTZ-CRYST - 20.000MHZ	
X7000	285P434010	QTZ-CRYST - 8.000MHZ	
X7A15	285P434020	QTZ-CRYST - 16.000MHZ	
X52A0	285P441010	QTZ-CRYST - 26.800MHZ	
K9A50	**287P100010**	**RELAY-PWR - DG9D1-0(M)-II-0.25W**	
	292C955010	CLIP-RADIATOR	ik
TU5200	**295P490040**	**TUNER-TV - ENA46914P4A**	
TU1A01	**295P516010**	**TUNER-TV - 115-V-F045AP**	
TU1B01	**295P516010**	**TUNER-TV - 115-V-F045AP**	
	299P254020	IR-EMITTER, 4-HEAD - T-IR-02 W/FERRITE CO	
X2F10	299P267010	RESONATOR-CERAMIC - CSBLA503KECZF30-B0	
X2G10	299P267010	RESONATOR-CERAMIC - CSBLA503KECZF30-B0	
	299P271010	MEMORY-CARD-READER (PCB)	
	305P702020	SW-RF - YAA41-0126G	

[#] Model Legend:

(a) WS-48513, (b) WS-48613, (c) WS-55513, (d) WS-55613, (e) WS-55813, (f) WS-65513, (g) WS-65613, (h) WS-65713, (i) WS-65813, (j) WS-73513, (k) WS-73713

Ref #	Part #	Part Name & Description	[#]
	330P294010	**YOKE-DEFL - 840UH**	**abc**
	330P294020	**YOKE-DEFL - 720UH**	**defghijk**
	338P054030	ASSY-SVM	acf
	338P054040	ASSY-SVM	bdeghijk
	411D033010	CORE-FERRITE - R15 L18	ehijk
	411D044010	CORE-FERRITE - R19.5 L32	ehijk
	411D044020	CORE-FERRITE - R19.5 L32	abcdfg
	411D062010	CORE-FERRITE - R15 L18	abcdfg
PJ2J11	440C231010	PIN-JACK-BOARD-3P	abcdfgj
PJ2J11	440C384010	PIN-JACK-BOARD-3P	ehik
PJ2J00	440C407010	PIN-JACK-BOARD-6P	abcdfgj
PJ2J00	440C407050	PIN-JACK-BOARD-6P-2S	ehik
PJ2J31	440C409010	PIN-JACK-BOARD-2P	abcdfgj
PJ2J31	440C409050	PIN-JACK-BOARD-2P	ehik
PJ2J10	440C410010	PIN-JACK-BOARD-5P	abcdfgj
PJ2J20	440C410010	PIN-JACK-BOARD-5P	abcdfgj
PJ2J30	440C410010	PIN-JACK-BOARD-5P	abcdfgj
PJ2J10	440C410050	PIN-JACK-BOARD-5P	ehik
PJ2J20	440C410050	PIN-JACK-BOARD-5P	ehik
PJ2J30	440C410050	PIN-JACK-BOARD-5P	ehik
PJ2J70	440C412010	PIN-JACK-BOARD-3P	abcdfgj
PJ2J70	440C412050	PIN-JACK-BOARD-3P-1S	ehik
PJ2J41	440C421010	PIN-JACK-BOARD-2P	abcdfgj
PJ2J50	440C421010	PIN-JACK-BOARD-2P	abcdfgj
PJ2J60	440C421010	PIN-JACK-BOARD-2P	abcdfgj
PJ2J41	440C421050	PIN-JACK-BOARD-2P	ehik
PJ2J50	440C421050	PIN-JACK-BOARD-2P	ehik
PJ2J60	440C421050	PIN-JACK-BOARD-2P	ehik
	449C141030	**SOCKET-CRT**	
PJ7C00	451C129010	JACK-MINI - AV NET/IR BLAST	
PJ7C01	451C129010	JACK-MINI - AV NET/IR BLAST	
PJ7C02	451C129010	JACK-MINI - AV NET/IR BLAST	
PJ7C03	451C129010	JACK-MINI - AV NET/IR BLAST	
J2C01	452C388010	CONNECTOR-9P SUB	
J5100	451P246010	JACK-1394 - MINI	
J5110	451P246010	JACK-1394 - MINI	
PJ2J40	452C315010	CONNECTOR-VGA	
J2D01	452C371020	CONNECTOR-DVI	
	453B036010	**CAP-ANODE - LONG [R]**	**abcdefgh**
	453B036020	**CAP-ANODE - LONG [GB]**	**abcdefgh**
	453B036070	**CAP-ANODE - [R]**	**ijk**
	453B036080	**CAP-ANODE - [BG]**	**ijk**
	480P053010	SPEAKER - 5"	ab
	480P057010	SPEAKER - 6.5"	hk
	480P058010	SPEAKER - 3"	hk
	480P063010	SPEAKER - 6"	cfj
	480P066010	SPEAKER - 6"	dg
	480P074010	SPEAKER - 5"x 7"	ei
	490P154010	LENS-BARREL - RED	ab
	490P154020	LENS-BARREL - BLUE/GREEN	ab
	490P174070	LENS-BARREL - RED	dfg
	490P174080	LENS-BARREL - GREEN	dfg
	490P174090	LENS-BARREL - BLUE	defgh
	490P212010	LENS-BARREL - RED	eh
	490P212020	LENS-BARREL - GREEN	eh
	490P220010	LENS-BARREL - BLUE	c
	490P220040	LENS-BARREL - RED/GREEN	c
	490P226010	LENS-BARREL - ALL	ijk

Ref #	Part #	Part Name & Description	[#]
	589C063010	CASTOR - DUAL WHEEL	
	594C932010	SHEILD-CRT - TRAY	ijk
	597D843010	STIFFENER-MIRROR - 3/4"X3/4" TUBING	fgh
	598D417010	PLATE-RF SWITCH	
	598D456010	BRACKET-MIRROR - TOP	ab
	622B009020	SHIELD-CRT - TRAY	abcdefgh
	622C085020	BOARD TOP - PVC	i
	622C086010	CLIP-MIRROR - TOP	ab
	622D928010	PIN-PUSH - SP GRILLE	hk
	622D967010	BAND-KM	abcdefgijk
	642C340010	BOARD-MIRROR - TOP	fgh
	642C352010	CLIP-MIRROR - TOP	cd
	703B044010	PANEL-CARD READER - FRONT	ei
	750A449010	COVER-BACK - TOP	ab
	761C725010	COVER-BTM - CARD READER	ehijk
	761C725020	COVER-BTM - CARD READER	abcdfg
	761C726010	COVER-TOP - CARD READER	
	761C730010	PANEL-CARD READER - FRONT	acf
	761C731010	PANEL-CARD READER - FRONT	bdg
	762B377010	BACK-BOARD	cd
	762B379010	BACK-BOARD	ab
	762B381010	BACK-BOARD	fg
	762B383010	BACK-BOARD	h
	762B373020	BACK-BOARD	i
	762B383020	BACK-BOARD	j
	762B383030	BACK-BOARD	k
	762B385010	BACK-BOARD	e
	767C031020	MIRROR - 73"	jk
	767D048090	MIRROR - 65"	fghi
	767D072030	MIRROR - 55"	d
	767D072040	MIRROR - 48"	ab
	767D072050	MIRROR - 55"	c
	767D072060	MIRROR - 55"	e
Z7K01	939P617010	UNIT-PREAMP - GP1U283Q	
	975B164006	ASSY-PANEL-CONTROL	hk
		PRINTED CIRCUIT BOARDS	
	930B903001	ASSY-PWB-MAIN	defgh
	930B903002	ASSY-PWB-MAIN	abc
	930B903004	ASSY-PWB-MAIN	ijk
	930B904001	ASSY-PWB-POWER	abcdefgij
	930B904002	ASSY-PWB-POWER	hk
	930B905001-48	ASSY-PWB-SIGNAL	ab
	930B905001-55	ASSY-PWB-SIGNAL	cd
	930B905002-55	ASSY-PWB-SIGNAL	e
	930B905001-65	ASSY-PWB-SIGNAL	fg
	930B905002-65	ASSY-PWB-SIGNAL	hi
	930B905001-73	ASSY-PWB-SIGNAL	j
	930B905002-73	ASSY-PWB-SIGNAL	k
	930D059001	ASSY-PWB-MLINK	
	934C059001	ASSY-PWB-CRT	
	934C060001	ASSY-PWB-TERMINAL	abcdfgj
	934C060002	ASSY-PWB-TERMINAL	ehik
	934C061001	ASSY-PWB-E2P	
	934C063001	ASSY-PWB-DOUBLER	
	934C066001	ASSY-PWB-DEMOD	
	934C067001	ASSY-PWB-DM	abcdfgj
	934C067002	ASSY-PWB-DM	ehik

[#] Model Legend:

(a) WS-48513, (b) WS-48613, (c) WS-55513, (d) WS-55613, (e) WS-55813, (f) WS-65513, (g) WS-65613, (h) WS-65713, (i) WS-65813, (j) WS-73513, (k) WS-73713

Ref #	Part #	Part Name & Description	[#]
	934C068001	ASSY-PWB-DTV-TUNER	
	935D733001	ASSY-PWB-PREAMP	
	935D734001	ASSY-PWB-DBF	
	935D736001	ASSY-PWB-CONTROL	
	935D737001	ASSY-PWB-FRONT	abcdfgj
	935D737002	ASSY-PWB-FRONT	ehik
	935D747001	ASSY-PWB-SVM	

COSMETIC PARTS

Ref #	Part #	Part Name & Description	[#]
	702A432010	PANEL-TERMINAL - AC	
	702A433010	PANEL-TERMINAL - DM	
	703B042010	DOOR-CONTROL - A/V	hjk
	703B043010	DOOR-CONTROL - A/V	ei
	704B192010	BUTTON-CONTROL PANEL	hk
	704B198010	BUTTON-CONTROL PANEL	ei
	705C011020	DOOR-CONTROL - A/V	abcdfg
	702A443010	PANEL-CONTROL - BTM FRAME	hk
	702A444010	PANEL-CONTROL - BTM FRAME	J
	716C032010	BADGE-BRAND - SILVER	hk
	716C041010	BADGE-BRAND - ALUMINUM	ei
	720C188050	COVER-FRONT	abhi
	720C250020	COVER-FRONT	fg
	720C254020	COVER-FRONT	cd
	720C257010	COVER-FRONT	e
	752A003020	GRILLE-SPEAKER - TOP	h
	752A003040	GRILLE-SPEAKER - TOP	k
	760A011010	INLAY TERMINAL - AC	
	760A012010	INLAY TERMINAL - DM	
	761A175010	GRILLE-SP-LEFT - 65"	h
	761A175020	GRILLE-SP-RIGHT	hk
	761A186010	GRILLE-SP-LEFT - 73"	k
	761A196020	GRILLE-SPEAKER - 73"	j
	761A199020	GRILLE-SPEAKER - 65"	i
	761A209020	GRILLE-SPEAKER - 48"	b
	761A210020	GRILLE-SPEAKER - 55"	d
	761A211020	GRILLE-SPEAKER - 65"	g
	761A212020	GRILLE-SPEAKER - 55"	c
	761A213020	GRILLE-SPEAKER - 65"	f
	761A215020	GRILLE-SPEAKER - 48"	a
	761A223010	GRILLE-SPEAKER - 55"	e
	762B358020	UNIT-FRONT	h
	762B358030	UNIT-FRONT	k
	762B375020	PANEL-FRONT - WOOD	i
	762B384010	PANEL-FRONT - WOOD	e

ACCESSORIES

Ref #	Part #	Part Name & Description	[#]
	955C238001	ASSY-MEMORY-CARD-READER	ehijk
	955C238002	ASSY-MEMORY-CARD-READER	abcdfg
	242D525010	CABLE-AUDIO CABLE	
	242D527010	CABLE-IR	
	242D535010	CABLE-EXTENSION-1394	
	242D536010	CABLE-MEMORY-USB/5P-JS	
	290P117010	REMOTE CONTROL - V22+/V23	
	I/NET WS48513	NET COMMAND GUIDE - PAPER	ab
	I/QR WS48513	GUIDE - QUICK REF	
	856D073010	WARRANTY SEAL	
	I/B WS48513	GUIDE - OWNERS	

[#] Model Legend:

(a) WS-48513, (b) WS-48613, (c) WS-55513, (d) WS-55613, (e) WS-55813, (f) WS-65513, (g) WS-65613, (h) WS-65713, (i) WS-65813, (j) WS-73513, (k) WS-73713

Ref #	Part #	Part Name & Description	[#]
		WS-48513/48613 Screen Parts (Figure 1)	
(1)	491P138020	SCREEN-LENTICULAR - 48"	ab
(2)	491P139020	LENS-FRESNEL - 48"	ab
(3)	597C027010	BRACKET-SCREEN FRAME	ab
(4)	598D339010	BRACKET-SCREEN-SIDE	ab
(5)	622B010010	HOLDER-SCREEN - TOP	ab
(6)	622B011010	HOLDER-SCREEN - BOTTOM	ab
(7)	622B012010	HOLDER-SCREEN - SIDE	ab
(8)	622B013020	CLIP-DIAMOND SHIELD - 48"	ab
(9)	635B109010	STIFFENER-SCREEN - TOP	ab
(10)	751A005040	BEZEL, FRONT (WS-48513)	a
(10)	751A005050	BEZEL, FRONT (WS-48613)	b
(11)	760D628090	DIAMOND SHIELD-48"	ab

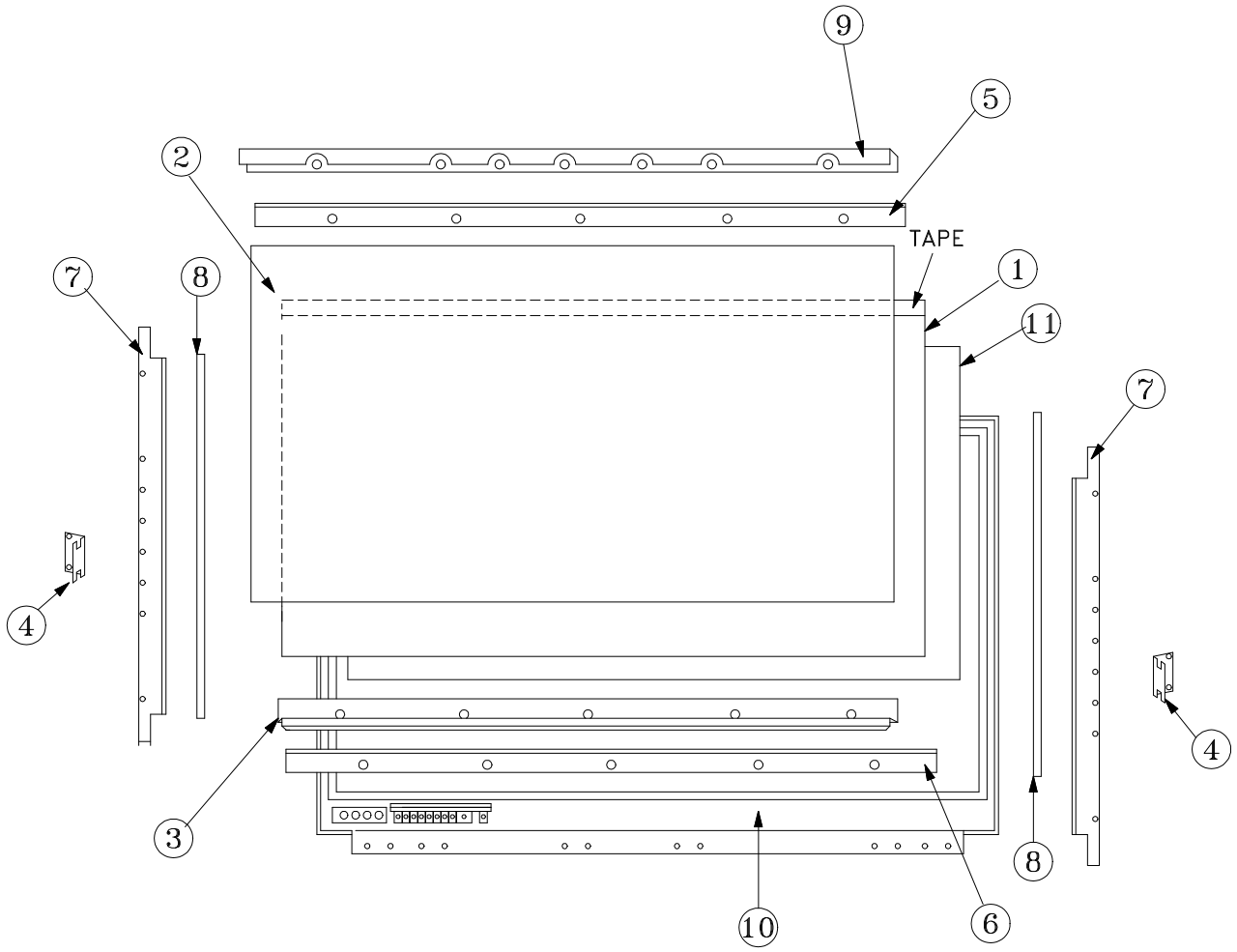

Figure 1: WS-48513 / WS-48613

MODELS: WS-48513 / WS-48613 / WS-55513 / WS-55613 / WS-55813 / WS-65513 / WS-65613 / WS-65713 / WS-65813 / WS-73513 / WS-73713

[#] Model Legend:

(a) WS-48513, (b) WS-48613, (c) WS-55513, (d) WS-55613, (e) WS-55813, (f) WS-65513, (g) WS-65613, (h) WS-65713, (i) WS-65813, (j) WS-73513, (k) WS-73713

WS-55513 / WS-55613 (Figure 2)

Ref #	Part #	Part Name & Description	[#]
(1)	491P125030	SCREEN-LENTICULAR - 55"	cd
(2)	491P126020	LENS-FRESNEL - 55"	cd
(11)	598D491010	BRACKET-SCREEN SIDE	cdfg
(3)	622B016010	CLIP-DIAMOND SHIELD - 55"	cd
(4)	622C104010	HOLDER-SCREEN	cd
(5)	701B481010	FRAME-SCREEN-TOP	cd
(6)	701B482010	FRAME-SCREEN-SIDE	cd
(7)	702A435010	CAP-CORNER - TOP	cdfg
(8)	702A436030	PANEL-CONTROL - BTM FRAME	c
(8)	702A436040	PANEL-CONTROL - BTM FRAME	d
(9)	760D628080	DIAMOND SHIELD - 55"	cd

(WS-65513 / WS-65613 (Figure 2)

Ref #	Part #	Part Name & Description	[#]
(1)	491P145020	SCREEN-LENTICULAR - 65"	fgh
(2)	491P146020	LENS-FRESNEL - 65"	fgh
(10)	594C988010	BRACKET-SCREEN FRAME	fg
(11)	598D491010	BRACKET-SCREEN SIDE	cdfg
(3)	622B016020	CLIP-DIAMOND SHIELD - 65"	fg
(4)	622C104020	HOLDER-SCREEN	fg
(5)	701B481020	FRAME-SCREEN-TOP	fg
(6)	701B482020	FRAME-SCREEN-SIDE	fg
(7)	702A435010	CAP-CORNER - TOP	cdfg
(8)	702A437030	PANEL-CONTROL - BTM FRAME	f
(8)	702A437040	PANEL-CONTROL - BTM FRAME	g
(9)	760D627070	DIAMOND SHIELD - 65"	fg

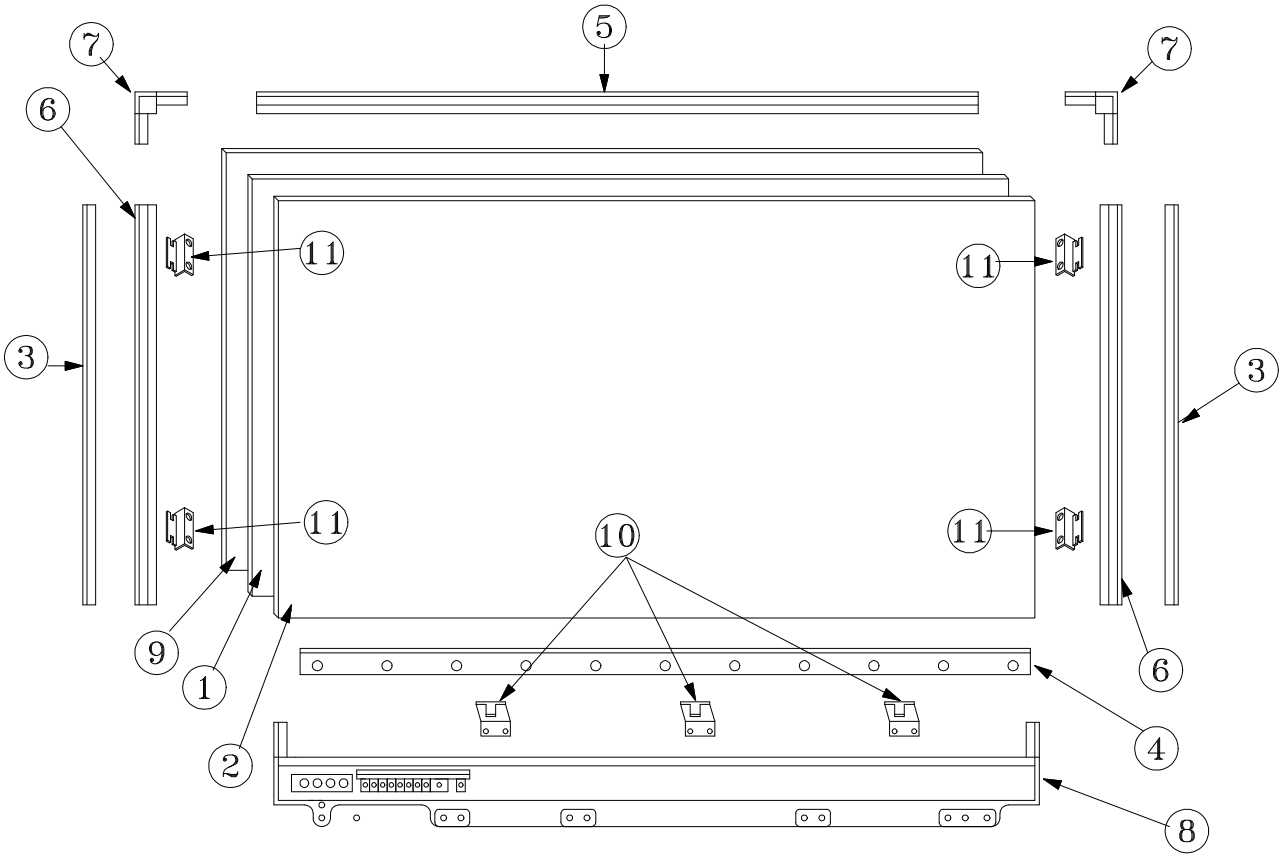

Figure 2: WS-55513 / WS-55613 / WS-65513 / WS-65613

MODELS: WS-48513 / WS-48613 / WS-55513 / WS-55613 / WS-55813 / WS-65513 / WS-65613 / WS-65713 / WS-65813 / WS-73513 / WS-73713

[#] Model Legend:

(a) WS-48513, (b) WS-48613, (c) WS-55513, (d) WS-55613, (e) WS-55813, (f) WS-65513, (g) WS-65613, (h) WS-65713, (i) WS-65813, (j) WS-73513, (k) WS-73713

Ref #	Part #	Part Name & Description	[#]
		WS-55813 (Figure 3)	
(1)	491P162010	SCREEN-LENTICULAR - 55" AR	e
(2)	491P163010	SCREEN-FRESNEL - 55" AR	e
(3)	622C090020	CLIP-DIAMOND SHIELD - 55"	e
(8)	701B466020	FRAME-SCREEN-SIDE	e
(9)	701B467020	FRAME-SCREEN-TOP	e
(10)	701B468020	FRAME-SCREEN-BTM	e
(4)	702A408010	CAP-CORNER - TOP	ei
(11)	702A409010	CAP-CORNER-BOTTOM - RIGHT	ei
(6)	702A409020	CAP-CORNER-BOTTOM - LEFT	ei
(7)	760D646010	DIAMOND SHIELD - 55" AR	e

Ref #	Part #	Part Name & Description	[#]
		WS-65813 (Figure 3)	
(1)	491P164010	SCREEN-LENTICULAR - 65" AR	i
(2)	491P165010	SCREEN-FRESNEL - 65" AR	i
(3)	622C090010	CLIP-DIAMOND SHIELD - 65"	i
(8)	701B466030	FRAME-SCREEN-SIDE	i
(9)	701B467030	FRAME-SCREEN-TOP	i
(10)	701B468030	FRAME-SCREEN-BTM	i
(4)	702A408010	CAP-CORNER - TOP	ei
(11)	702A409010	CAP-CORNER-BOTTOM - RIGHT	ei
(6)	702A409020	CAP-CORNER-BOTTOM - LEFT	ei
(7)	760D644020	DIAMOND SHIELD - 65" AR	i

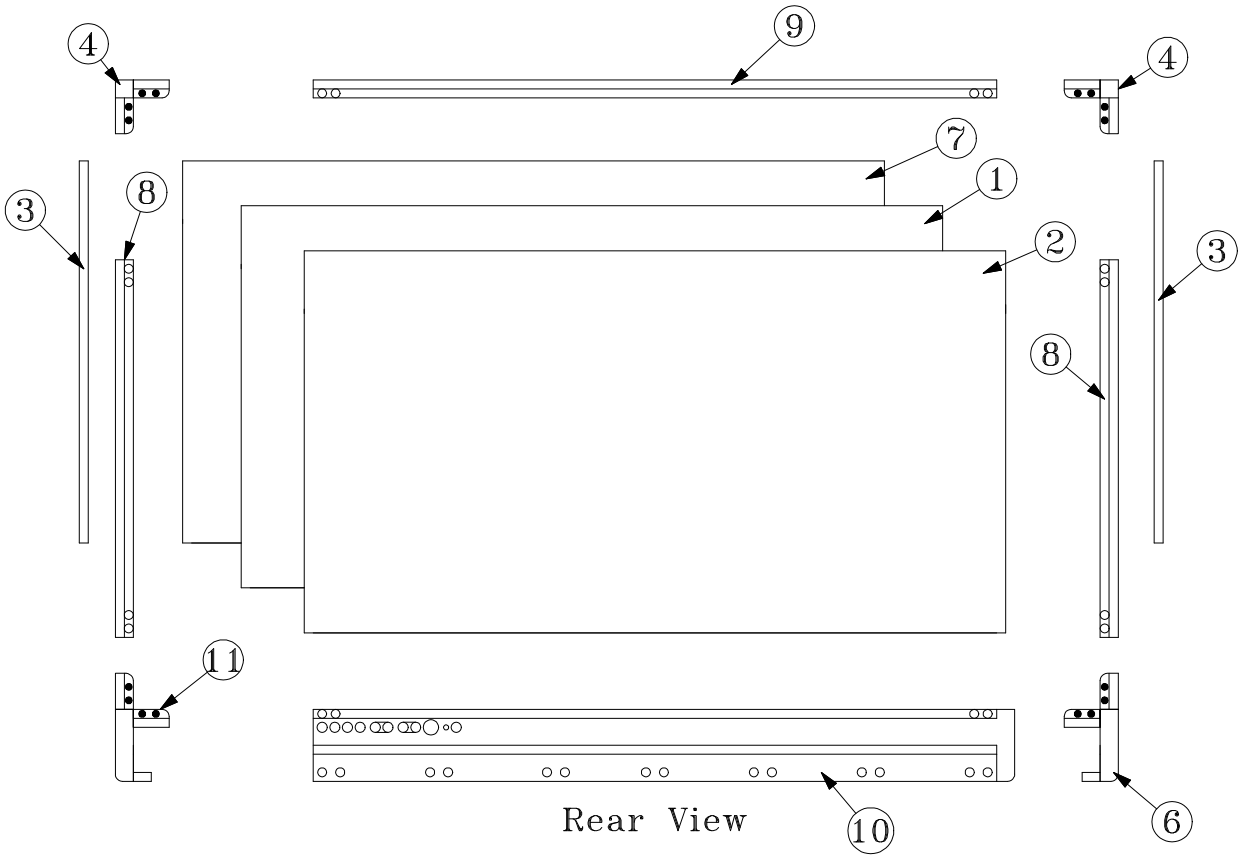

Figure 3: WS-55813 / WS-65813

MODELS: WS-48513 / WS-48613 / WS-55513 / WS-55613 / WS-55813 / WS-65513 / WS-65613 / WS-65713 / WS-65813 / WS-73513 / WS-73713

[#] Model Legend:

(a) WS-48513, (b) WS-48613, (c) WS-55513, (d) WS-55613, (e) WS-55813, (f) WS-65513, (g) WS-65613, (h) WS-65713, (i) WS-65813, (j) WS-73513, (k) WS-73713

Ref #	Part #	Part Name & Description	[#]
		WS-WS-65713 (Figure 4)	
(1)	491P145020	SCREEN-LENTICULAR - 65"	fgh
(2)	491P146020	LENS-FRESNEL - 65"	fgh
(3)	701B492010	FRAME-SCREEN-TOP	h
(4)	701B492030	FRAME-SCREEN-SIDE	h
(5)	701B492020	FRAME-SCREEN-BTM	h
(6)	760D628020	DIAMOND SHIELD - 65"	h
(7)	768C065010	CAP-CORNER	hk
(8)	622D746020	CLIP-DIAMOND SHIELD - 65"	h
(9)	597D803010	BRACKET-SCREEN	hk
		WS-73713 (Figure-4)	
(1)	491P085030	SCREEN-LENTICULAR - 73"	Jk
(2)	491P086030	LENS-FRESNEL - 73"	Jk
(3)	711C029070	FRAME-SCREEN-TOP	k
(4)	711C029080	FRAME-SCREEN-SIDE	k
(5)	711C029090	FRAME-SCREEN-BTM	k
(6)	760D628030	DIAMOND SHIELD - 73"	k
(7)	768C065010	CAP-CORNER	hk
(8)	622D746010	CLIP-DIAMOND SHIELD - 73"	k
(9)	597D803010	BRACKET-SCREEN	hk
		WS-73513 (Figure-4)	
(1)	491P085030	SCREEN-LENTICULAR - 73"	Jk
(2)	491P086030	LENS-FRESNEL - 73"	Jk
(3)	701B496010	FRAME-SCREEN-TOP	J
(4)	701B430050	FRAME-SCREEN-SIDE	J
(5)	701B496020	FRAME-SCREEN-BTM	J
(6)	760D638010	DIAMOND SHIELD - 73"	J
(7)	702A396030	CAP-CORNER - 73"	J
(8)	622C071060	CLIP-DIAMOND SHIELD - 73"	J
(10)	598D086010	BRACKET-SCREEN-MOUNT	J
(11)	598D092010	BRACKET-SCREEN-SIDE	J
(12)	598D087010	BRACKET--SCREEN-CORNER	J

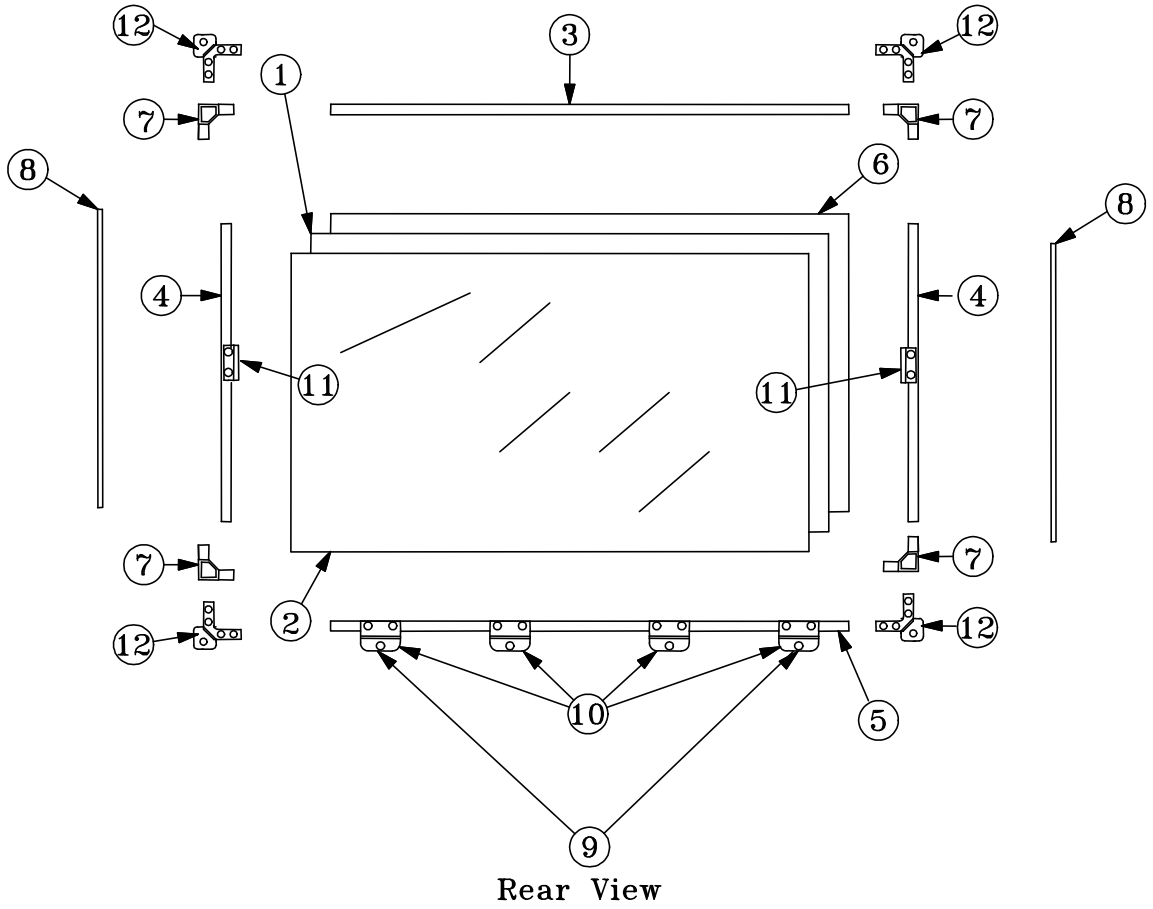

Figure 4: WS-65713 / WS-73713 / WS-73513

POWER SUPPLY

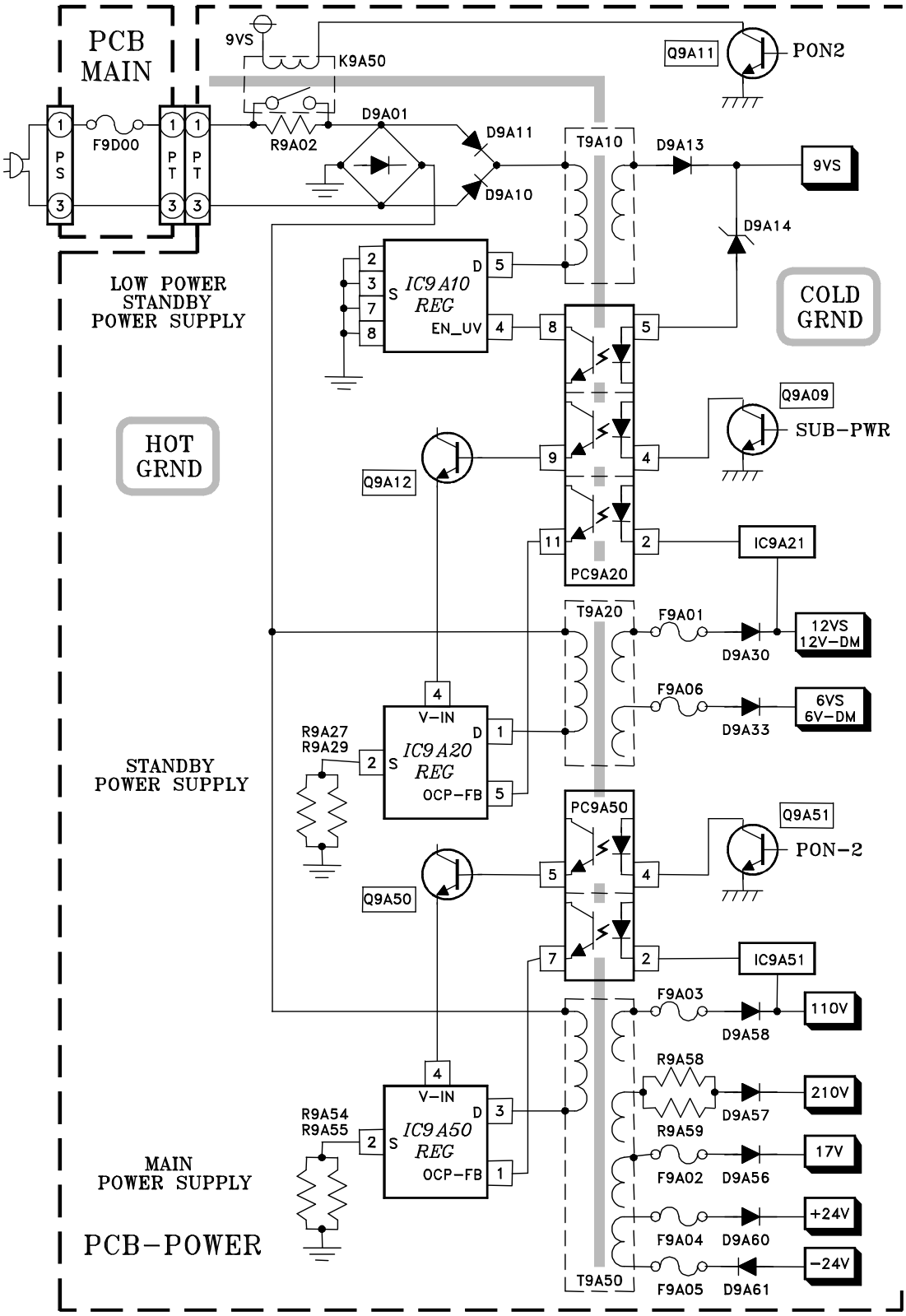

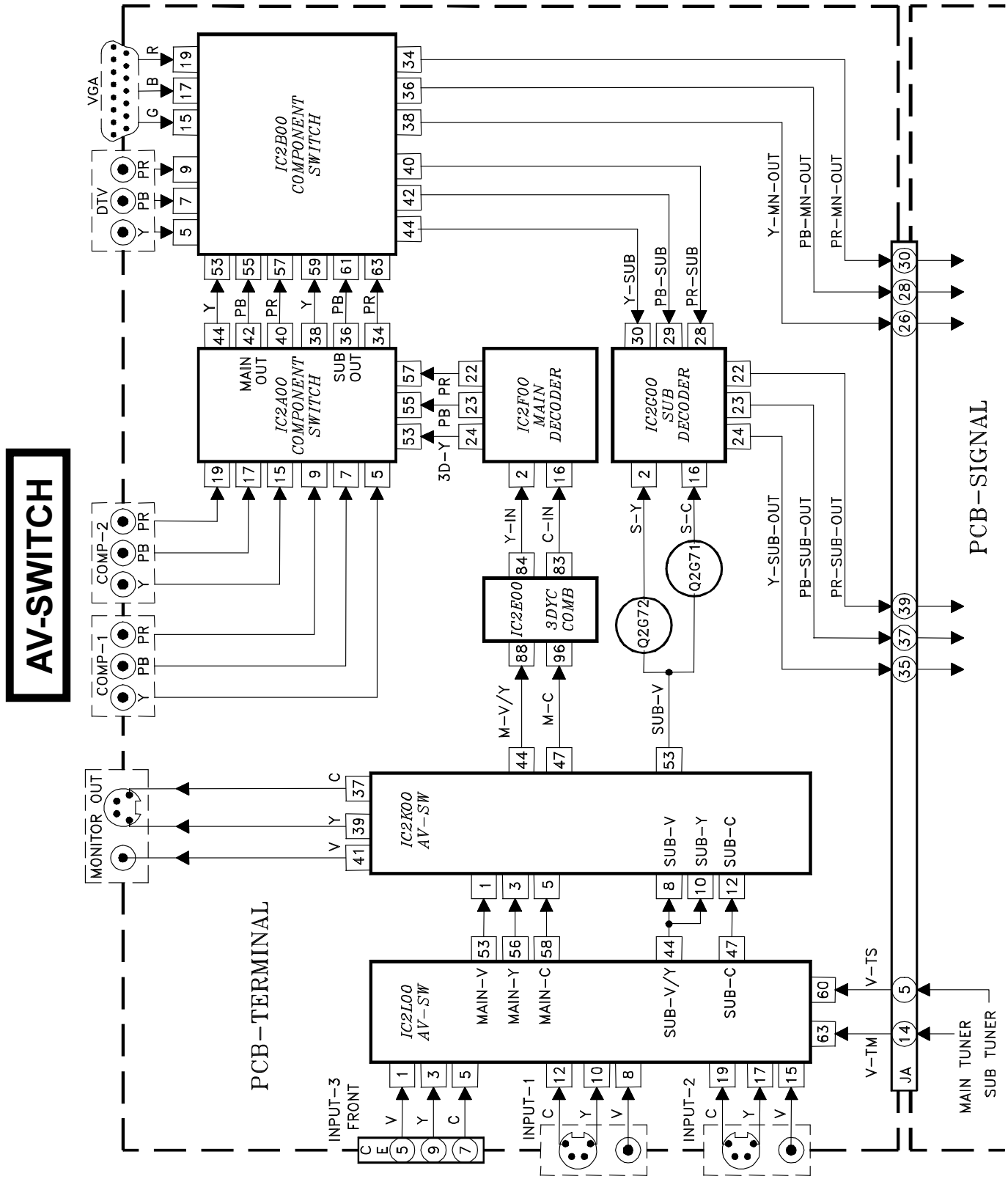
AV-SWITCH
IC2B00 COMPONENT SWITCH
IC2A00 COMPONENT SWITCH
MAIN OUT
SUB OUT
IC2F00 MAIN DECODER
IC2G00 SUB DECODER
IC2E00 3DYC COMB
IC2K00 AV-SW
IC2L00 AV-SW
VGA
DTV
COMP-1
COMP-2
MONITOR OUT
INPUT-3 FRONT
INPUT-1
INPUT-2
Y-MN-OUT
PB-MN-OUT
PR-MN-OUT
Y-SUB
PB-SUB
PR-SUB
Y-SUB-OUT
PB-SUB-OUT
PR-SUB-OUT
3D-Y
Y-IN
C-IN
S-Y
S-C
M-V/Y
M-C
SUB-V
SUB-Y
SUB-C
MAIN-V
MAIN-Y
MAIN-C
SUB-V/Y
V-TS
V-TM
MAIN TUNER
SUB TUNER
Q2G72
Q2G71
PCB-TERMINAL
PCB-SIGNAL

VIDEO/COLOR

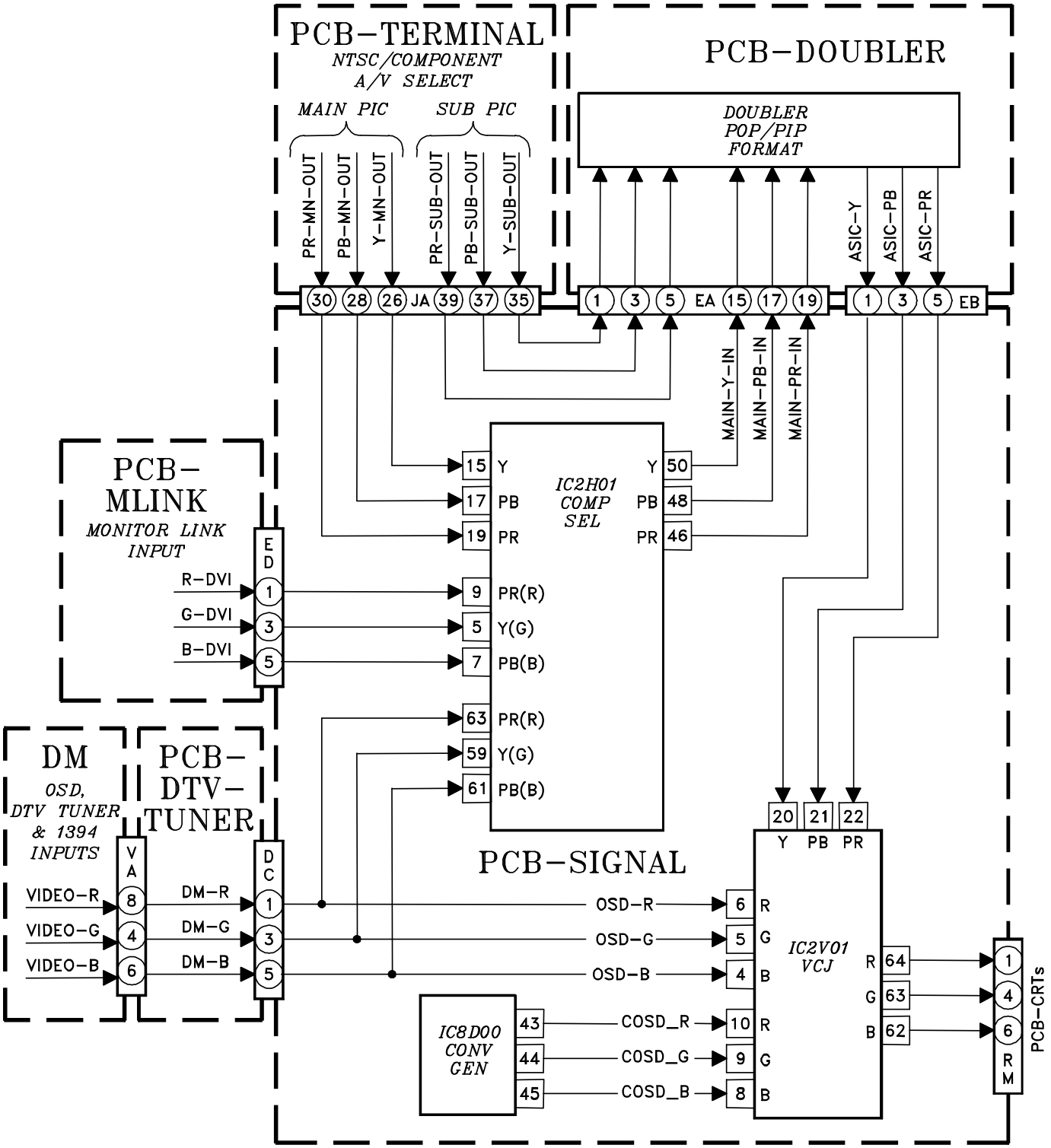
PCB–TERMINAL
NTSC/COMPONENT
A/V SELECT
MAIN PIC
SUB PIC
PR–MN–OUT
PB–MN–OUT
Y–MN–OUT
PR–SUB–OUT
PB–SUB–OUT
Y–SUB–OUT
30 28 26 JA 39 37 35
PCB–DOUBLER
DOUBLER
POP/PIP
FORMAT
ASIC–Y
ASIC–PB
ASIC–PR
1 3 5 EA 15 17 19
1 3 5 EB
MAIN–Y–IN
MAIN–PB–IN
MAIN–PR–IN
PCB–
MLINK
MONITOR LINK
INPUT
E
D
R–DVI
G–DVI
B–DVI
IC2H01
COMP
SEL
15 Y
17 PB
19 PR
Y 50
PB 48
PR 46
9 PR(R)
5 Y(G)
7 PB(B)
63 PR(R)
59 Y(G)
61 PB(B)
DM
OSD,
DTV TUNER
& 1394
INPUTS
V
A
VIDEO–R
VIDEO–G
VIDEO–B
PCB–
DTV–
TUNER
D
C
DM–R
DM–G
DM–B
PCB–SIGNAL
20 21 22
Y PB PR
OSD–R
OSD–G
OSD–B
6 R
5 G
4 B
IC2V01
VCJ
R 64
G 63
B 62
IC8D00
CONV
GEN
43 COSD_R
44 COSD_G
45 COSD_B
10 R
9 G
8 B
1 4 6
R
M
PCB–CRTs

SYNC SIGNAL PATH

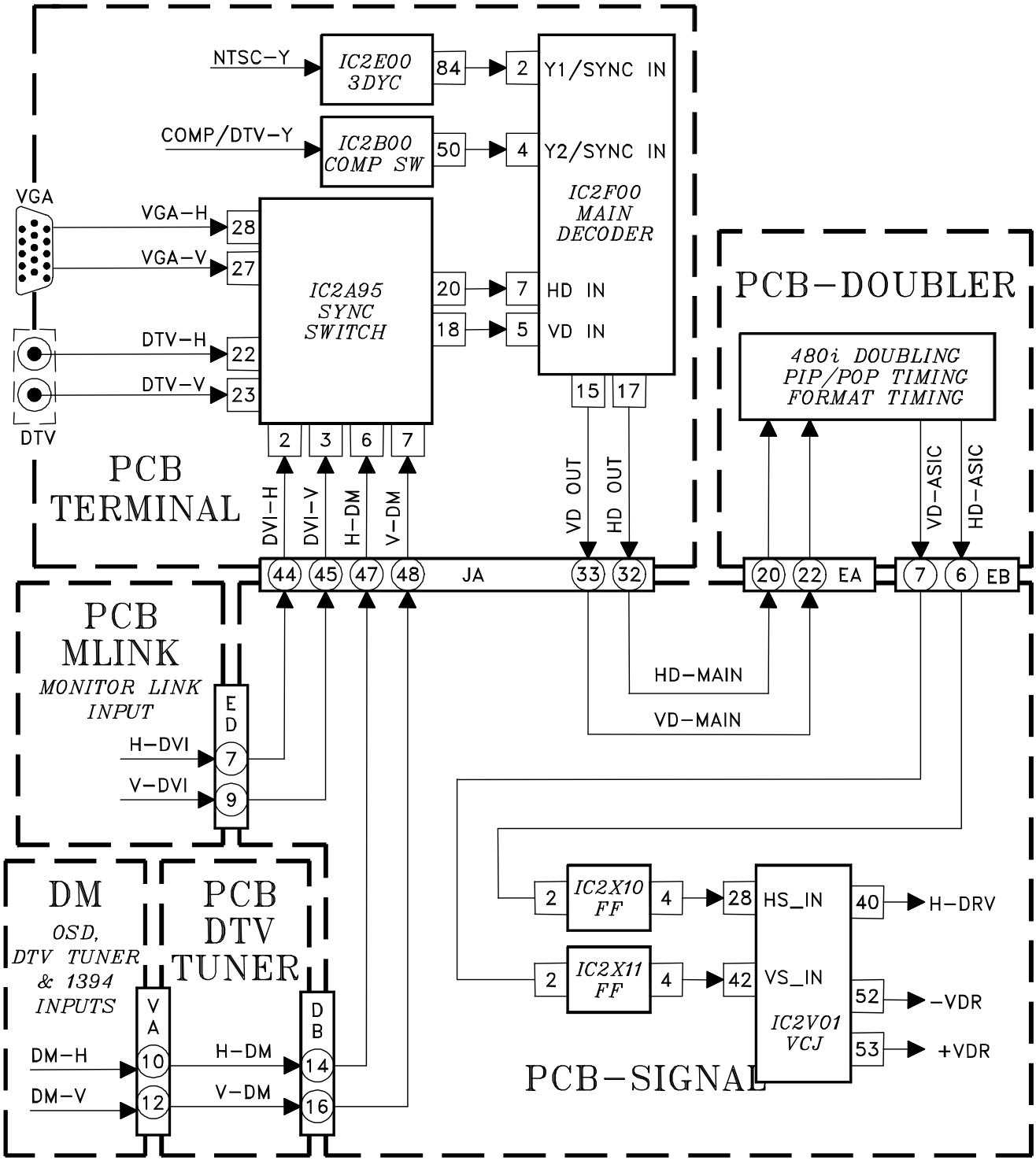

DEFLECTION / HV

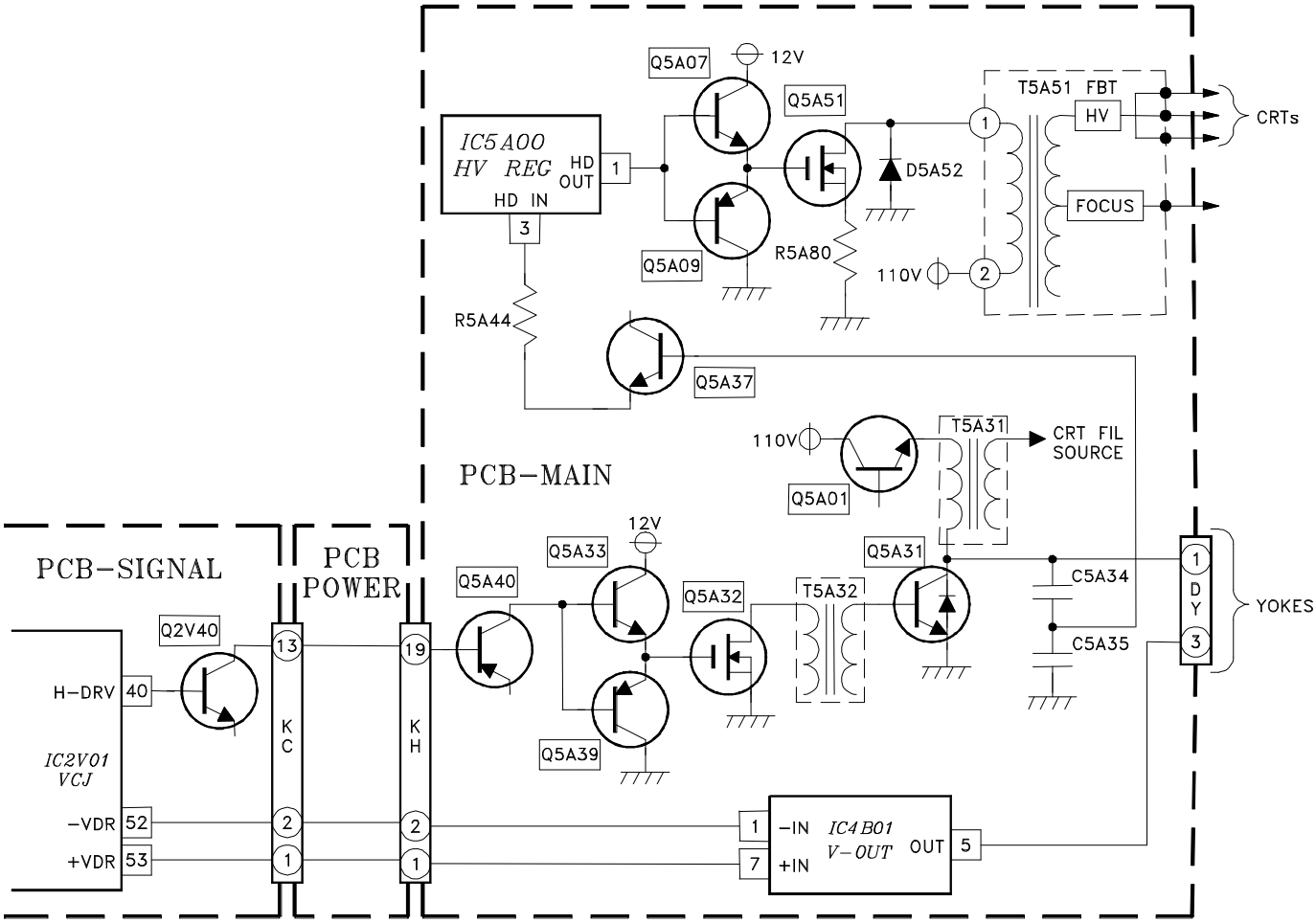

X-RAY PROTECT

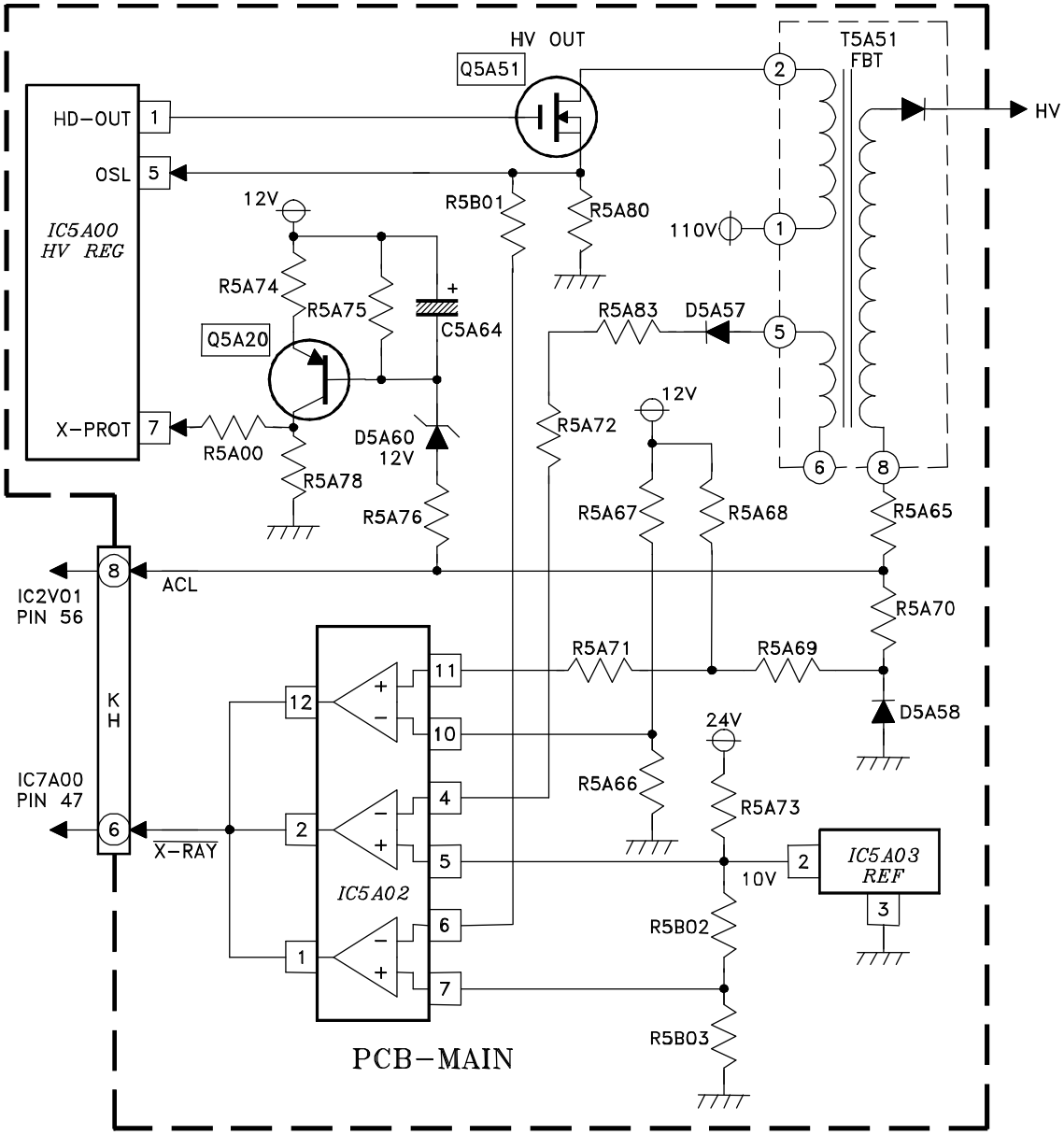

CONVERGENCE CIRCUIT

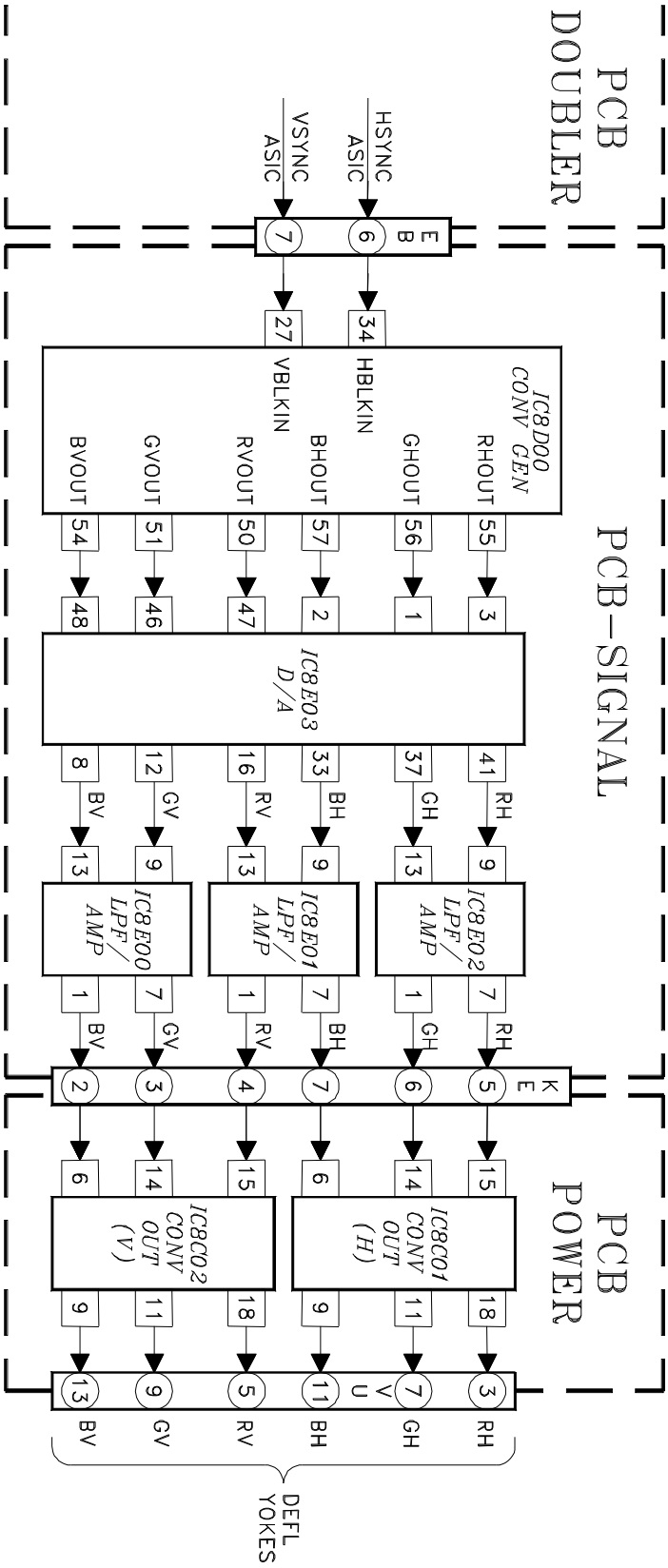

SOUND CIRCUIT

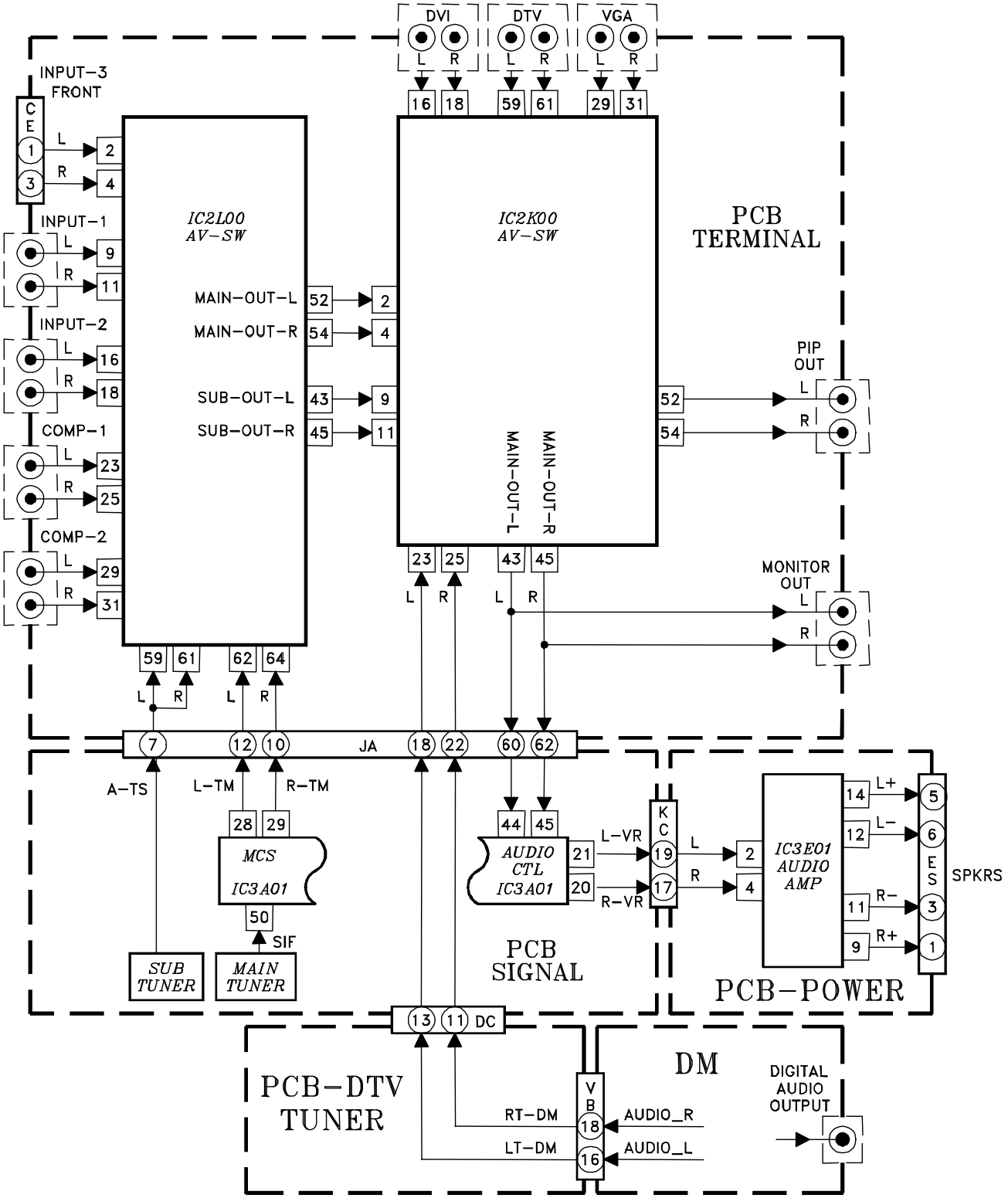

CONTROL CIRCUITRY

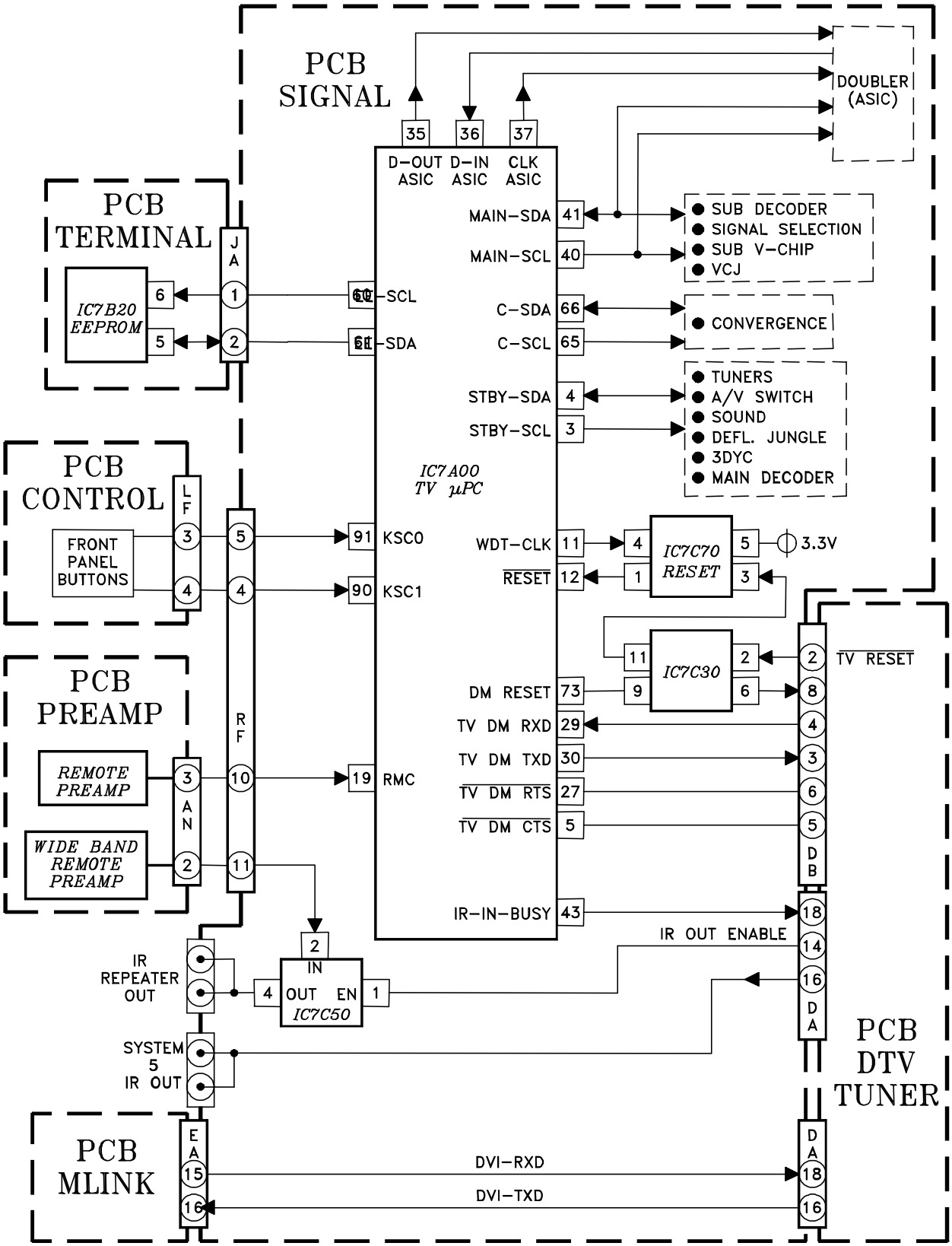

2003

MITSUBISHI ELECTRIC

Service Manual

PROJECTION TELEVISION

V23 / V23+ / V23++ / V23+++ CHASSIS

WS-48613

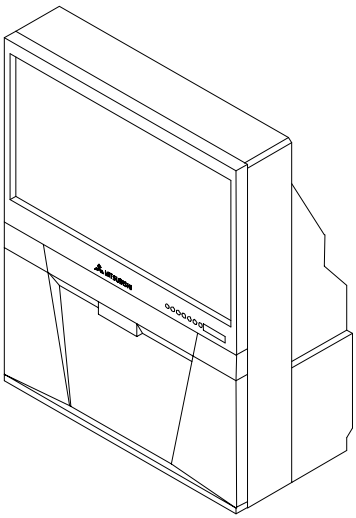

V23 MODELS
WS-48513
WS-55513
WS-65513
WS-73513

V23+ MODELS
WS-48613
WS-55613
WS-65613

V23++ MODELS
WS-65713
WS-73713

V23+++ MODELS
WS-55813
WS-65813

CAUTION:
Before servicing this chassis, it is important that the service person read the "SAFETY PRECAUTIONS" and "PRODUCT SAFETY NOTICE" contained in this manual.

PART 2
SCHEMATIC DIAGRAMS

CONTENTS **Page**

Overall PCB Block Diagram 1
PCB-MAIN 2
PCB-POWER 3
PCB-TERMINAL-1 4
PCB-TERMINAL-2 5
PCBs-CRT / CONTROL / FRONT / PREAMP / SVM / DBF ... 6
PCBs-M-LINK / E2P / DOUBLER-3 7
PCB-SIGNAL-1 (TUNER / AUDIO) 8
PCB-SIGNAL-2 (MICRO) 9
PCB-SIGNAL-3 (VIDEO/CHROMA) 10
PCB-SIGNAL-4 (CONVERGENCE-GEN) 11
PCB-DTV-TUNER 12
PCB-DEMOD 13
PCB-DOUBLER-1 14
PCB-DOUBLER-2 15

Refer to PART 1 for:
- Specifications
- Safety Precautions
- Disassembly
- CRT Replacement
- Electrical Adjustments
- Parts List
- Block Diagrams

MITSUBISHI DIGITAL ELECTRONICS AMERICA, INC.
9351 Jeronimo Road, Irvine, CA 92618-1904

Copyright © 2003 Mitsubishi Digital Electronics America, Inc.
All Rights Reserved

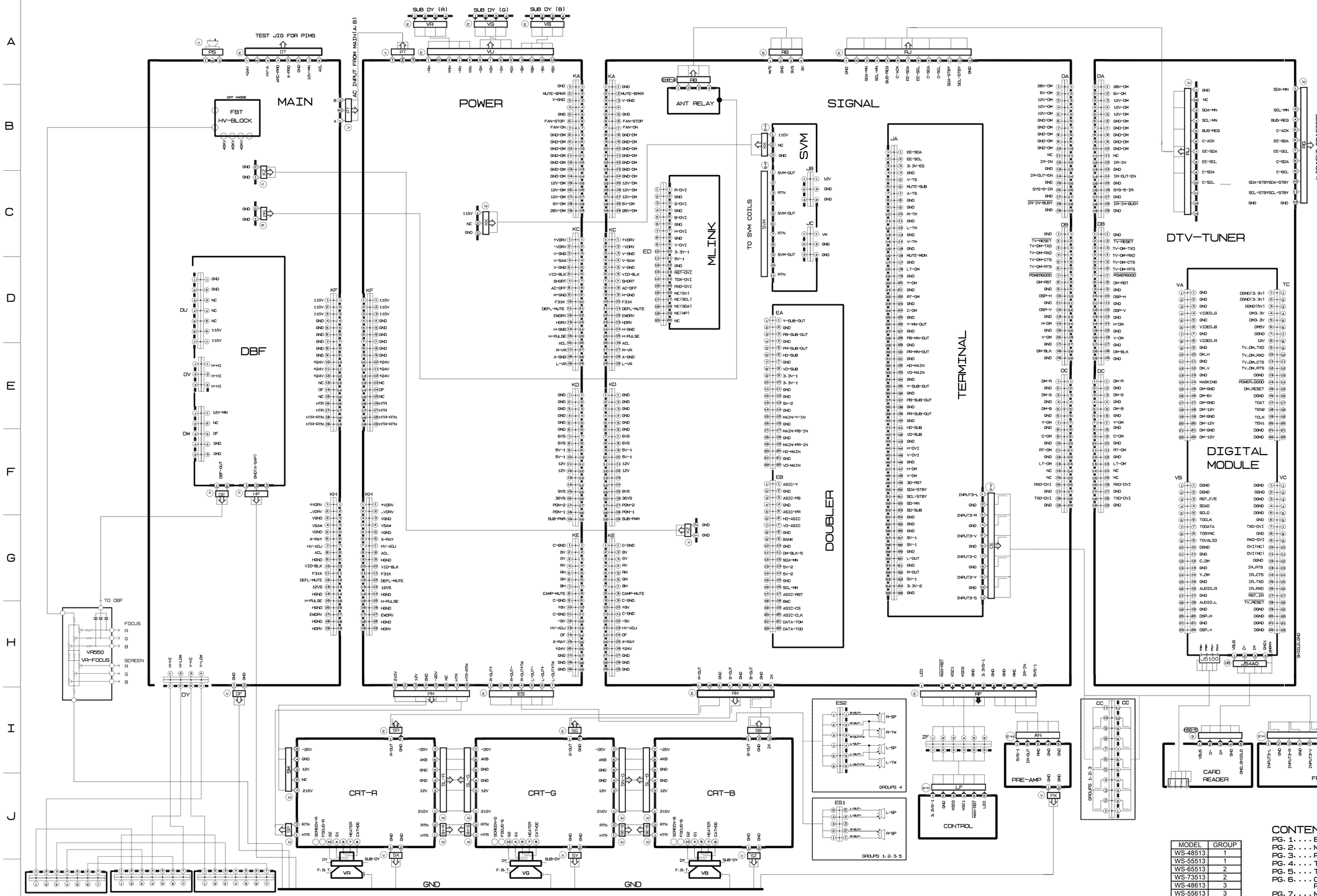

* NOTES

1. DC voltages were measured from points indicated to the circuit ground with a high-Z voltmeter
2. Wave form were taken with standard color bar signal.
3. TP13.etc. show test points.
4. CAPACITOR

Value	Not indicated	PF. for numbers more than 1 uF. for numbers less than 1
Dielectric strength	Not indicated : 50V	
Tolerance	Not indicated = +/- 10%	No tolerance is indicated for electrolytic capacitor and +/- 20%
	G=+/-2% P=+100% Q=+30% C=+/-0.25PF J=+/-5% -0% -10% D=+/-0.5PF K=+/-10% Z=+80% T=+200% F=+/-1PF M=+/-20% -20% -0% D=+/-2PF	
Type	I Parts except for chips	Not indicated : Ceramic capacitor MF : Polyester capacitor PP : Polypropylene film capacitor ALM : Aluminus electrolytic capacitor TF : Twin film capacitor SC : Semiconductor Ceramic capacitor MP : Metalized paper MPP : Metalized plastic film capacitor MMF : Metalized polyester capacitor MF,PP : Polyester polypropylene film capacitor PS : Styrol capacitor TAN or TANT : Tantalum capacitor : Electrolytic capacitor NP : Non polarized electrolytic capacitor
	II chips	Not indicated : Ceramic capacitor chip : Electrolytic capacitor NP : Non polarized electrolytic capacitor chip
Characteristic (only ceramic capacitor)	Not indicated	: F or B (high dielectric percentage)
	CH. SL. etc.	: Temperature compensaing types

5. RESITOR

Value	Not indicated = Ohm K = 1,000 Ohm M = 1,000,000 Ohm	
Wattage	Parts except for chips	Not indicated = 1/4W or 1/6W
	Chips	Not indicated = 1/10W
Toler ance	Not indicated = +/-5% D = +/-0.5% J = +/-5% F = +/-1% K = +/-10%	
Type	I Parts except for chips	Not indicated : Carbon resistor S : Fixed composition resistor MO : Metal oxide film resistor(Type B) CE : Cemented resistor W : Wire wound resistor M : Metal film resistor MP : Metal plate cement resistor ML : Metal liner resistor
	II chips	Not indicated : chip resistor

6. This is a basic schematic diagram. Some sets may be subject to modification according to engineering improvement

SHADED COMPONENTS HAVE SPECIAL CHARACTERISTICS IMPORTANT TO SAFETY. BEFORE REPLACING ANY OF THESE COMPONENTS, READ CAREFULLY THE PRODUCT SAFETY NOTICE IN THE SERVICE MANUAL. DON'T DEGRADE THE SAFETY OF THE RECEIVERS THROUGH IMPROPER SERVICING.

SERVICE TECHNICIAN WARNING:
X-RADIATION PRECAUTION
THIS PRODUCT INCLUES CRITICAL ELECTRICAL AND MECHANICAL PARTS ESSENTIAL FOR X-RADIATION PROFECTION
TO AVOID POSSIBLE TO X-RADIATION TAKE RADIATION PROTECTIVE MEASURE FOR PERSONNEL DURONG SERVICING.
SEE SERVICE INSTRUCTION FOR SPECIFIED REPLACEMENT PARTS AND SERVICE ADJUSTMENTS.

MODEL	GROUP
WS-48513	1
WS-55513	1
WS-65513	2
WS-73513	2
WS-48613	3
WS-55613	3
WS-65613	3
WS-65713	4
WS-73713	4
WS-55813	5
WS-65813	5

CONTENTS

PG. 1....BLOCK DIAGRAM
PG. 2....MAIN
PG. 3....POWER
PG. 4....TERMINAL 1
PG. 5....TERMINAL 2
PG. 6....CRT/CONTROL/FRONT/PREAMP/SVM/DBF
PG. 7....M.LINK/E2P/DOUBLER 3
PG. 8....SIGNAL 1
PG. 9....SIGNAL 2
PG. 10...SIGNAL 3
PG. 11...SIGNAL 4
PG. 12...TUNER
PG. 13...DEMOD
PG. 14...DOUBLER 1
PG. 15...DOUBLER 2

WS-48513 WS-65613
WS-55513 WS-65713
WS-65513 WS-73713
WS-73513 WS-55813
WS-48613 WS-65813
WS-55613

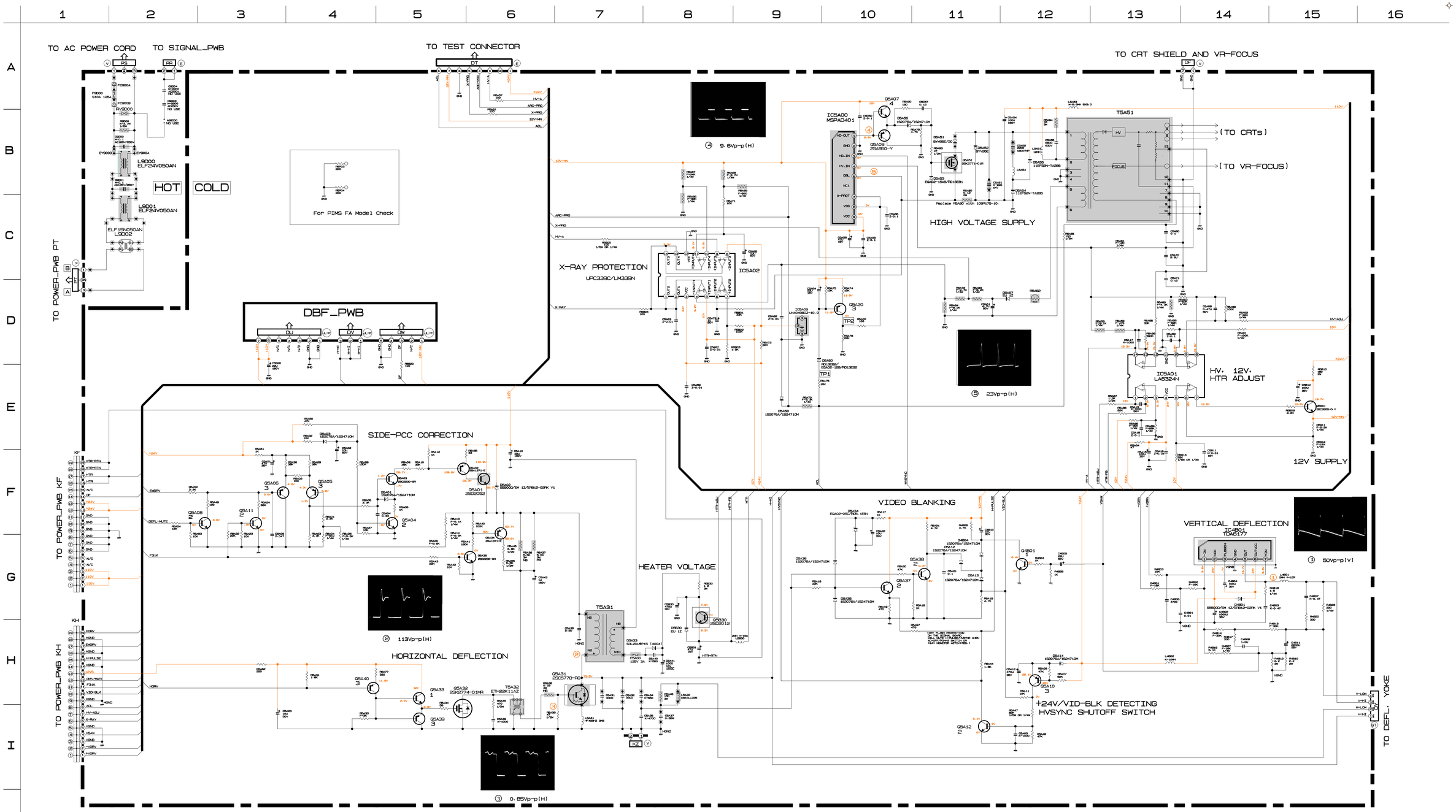

1 — 2SC1740 S-S/2SC3311 A-S
2 — 2SC1740 S-R, S/2SC3311 A-R, S
3 — 2SA933S-R, S/2SA1309A-R, S
4 — 2SC2274-F/2SC74K-F

MODELS	C5A37 I-8	R5A36 G-6	R5A37 G-6	C5A31 H-7	C5A32 H-7	R5A68 B-9	R5A69 B-9	R5A70 D-9	D5A60 D-10	R8P03 B-4	R8P04 B-4	L5A22 H-8	R4B10 H-15	NOTES
WS-48513, WS-48613 WS-55513	250V .47 MPP	4.7K 3W	4.7K 3W	3000 1800VHP	2700 1800VHP	F-2.7K	F-680	F-3.3K	RD13EB2	470	220	B815LL069	2.7 3W	7" CRTs GROUP 2
WS-55613, WS-55813 WS-65513, WS-65613 WS-65713	250V .56 MPP	3.9K 3W	3.9K 3W	3300 1800VHP	3300 1800VHP	F-2.7K	F-680	F-3.3K	RD13EB2	220	220	B815LL078	2.2 3W	7" CRTs GROUP 1
WS-65813, WS-73713 WS-73513	250V .56 MPP	3.9K 3W	3.9K 3W	3300 1800VHP	3300 1800VHP	F-2.0K	F-560	F-2.4K	RD9.1EB1.B2	1.8K	220	B815LL078	2.2 3W	9" CRTs GROUP 4

CONTENTS

PG. 1. . . . BLOCK DIAGRAM
PG. 2. . . . MAIN
PG. 3. . . . POWER
PG. 4. . . . TERMINAL 1
PG. 5. . . . TERMINAL 2
PG. 6. . . . CRT/CONTROL/FRONT/ PREAMP/SVM/DBF
PG. 7. . . . M. LINK/E2P/DOUBLER 3
PG. 8. . . . SIGNAL 1
PG. 9. . . . SIGNAL 2
PG. 10. . . SIGNAL 3
PG. 11. . . SIGNAL 4
PG. 12. . . TUNER
PG. 13. . . DEMOD
PG. 14. . . DOUBLER 1
PG. 15. . . DOUBLER 2

WS-48513 WS-65613
WS-55513 WS-65713
WS-65513 WS-73713
WS-73513 WS-55813
WS-48613 WS-65813
WS-55613

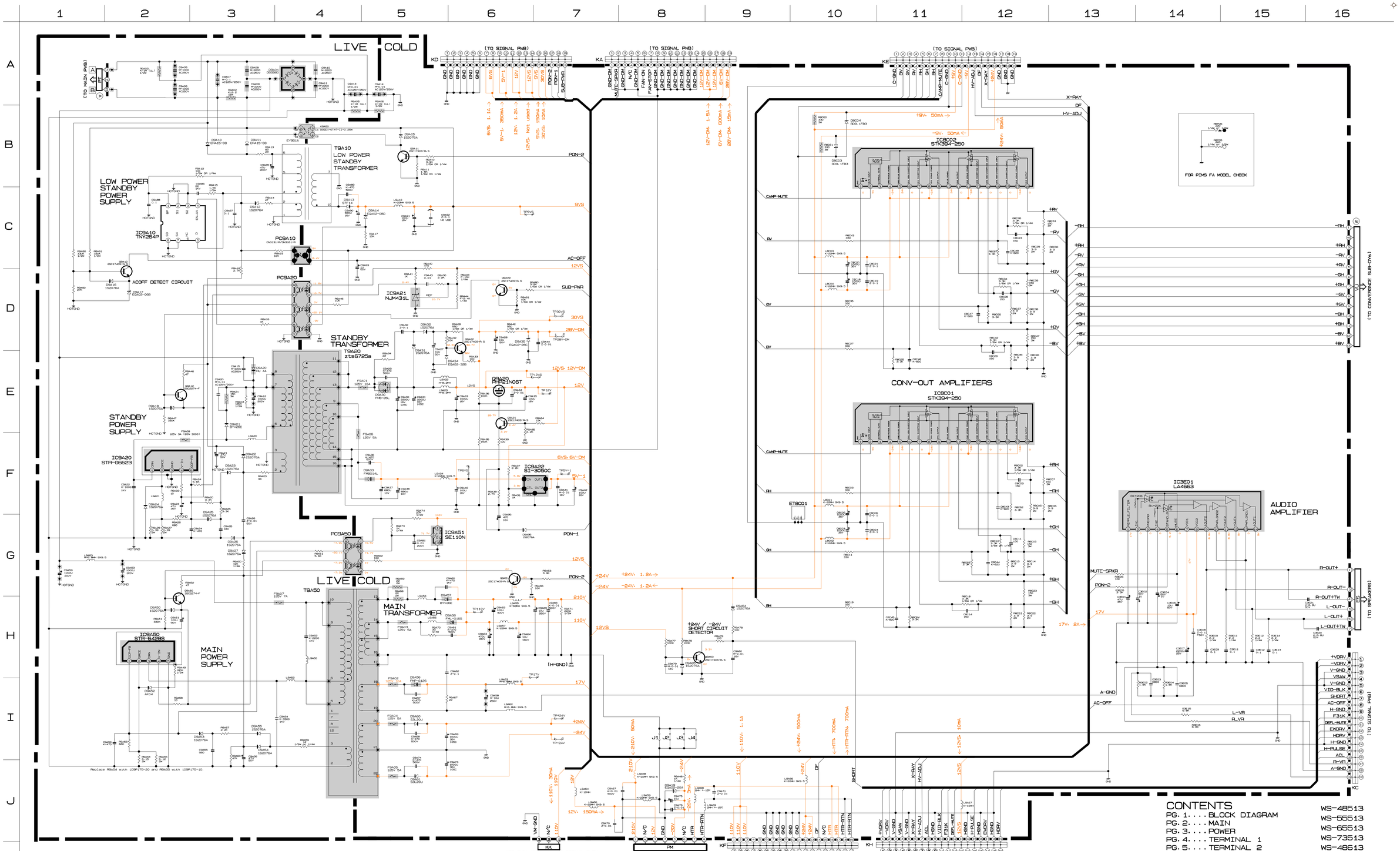

MODELS	C3E20 G-16	C3E21 G-16	R9P05 B-15	R9P06 B-15
WS-48513, WS-55513, WS-65513, WS-48613, WS-55613, WS-65613, WS-55813, WS-65813, WS-73513	X	X	220	220
WS-65713, WS-73713	6.8UF 50V	6.8UF 50V	470	220
PARTS LIST	AUDIO	AUDIO	AUDIO	AUDIO

CONTENTS

PG. 1 . . . BLOCK DIAGRAM	WS-48513
PG. 2 . . . MAIN	WS-55513
PG. 3 . . . POWER	WS-65513
PG. 4 . . . TERMINAL 1	WS-73513
PG. 5 . . . TERMINAL 2	WS-48613
PG. 6 . . . CRT/CONTROL/FRONT/ PREAMP/SVM/DBF	WS-55613
	WS-65613
PG. 7 . . . M. LINK/E2P	WS-65713
PG. 8 . . . SIGNAL 1	WS-73713
PG. 9 . . . SIGNAL 2	WS-55813
PG. 10 . . SIGNAL 3	WS-65813
PG. 11 . . SIGNAL 4	
PG. 12 . . TUNER	
PG. 13 . . DEMOD	

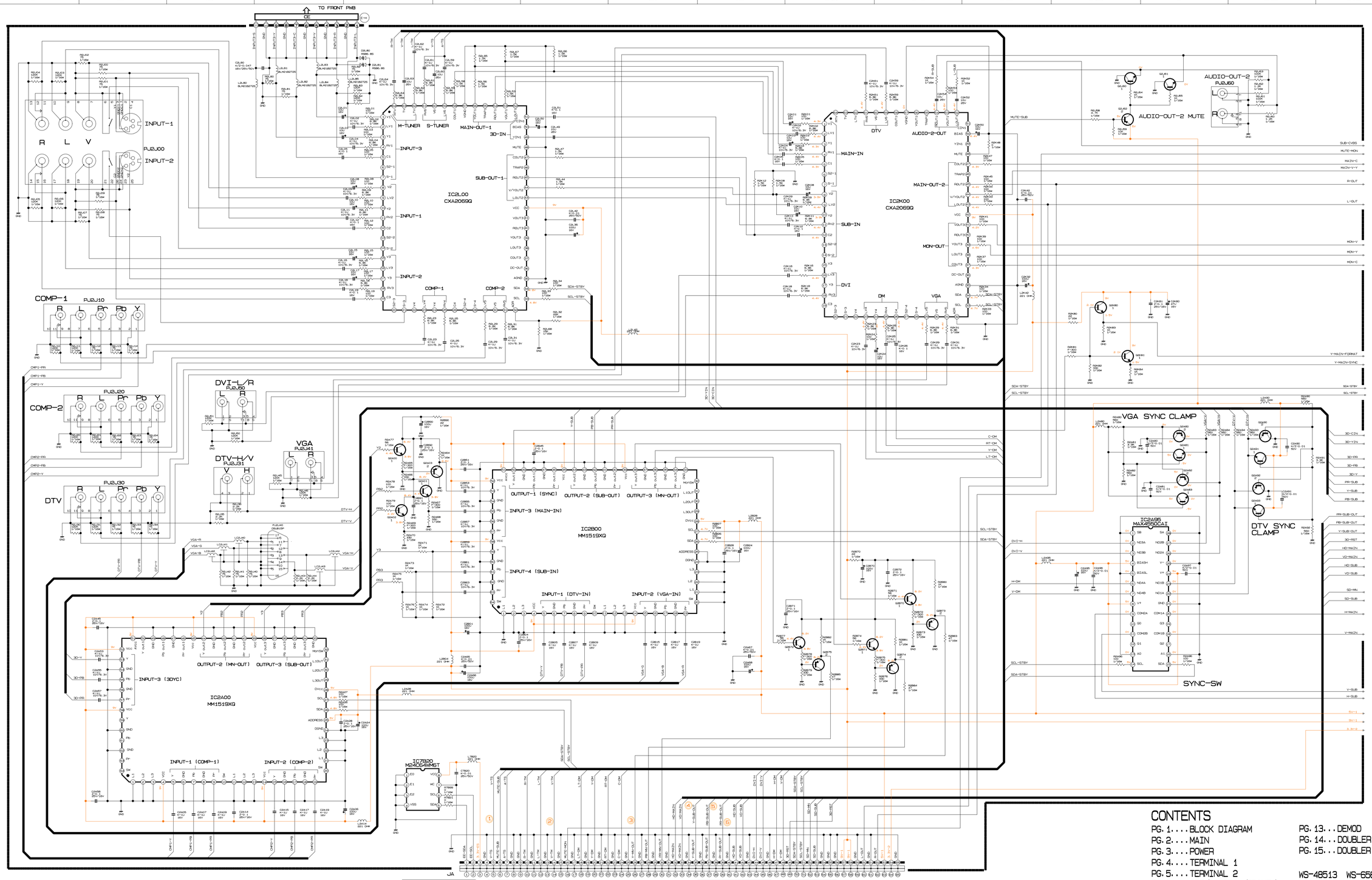

1 – 2SC2412K-R.S/2SD601AI-R.S
2 – 2SA1037K-R.S

①② 1Vp-p(H) ③④ 2.1Vp-p(H) ⑤ 0.7Vp-p(H) ⑥ 0.7Vp-p(H)

CONTENTS

PG.1....BLOCK DIAGRAM	PG.13...DEMOD	
PG.2....MAIN	PG.14...DOUBLER 1	
PG.3....POWER	PG.15...DOUBLER 2	
PG.4....TERMINAL 1		
PG.5....TERMINAL 2	WS-48513	WS-65613
PG.6....CRT/CONTROL/FRONT/ PREAMP/SVM/DBF	WS-55513	WS-65713
PG.7....M.LINK/E2P/DOUBLER 3	WS-65513	WS-73713
PG.8....SIGNAL 1	WS-73513	WS-55813
PG.9....SIGNAL 2	WS-48613	WS-65813
PG.10...SIGNAL 3	WS-55613	
PG.11...SIGNAL 4		
PG.12...TUNER		

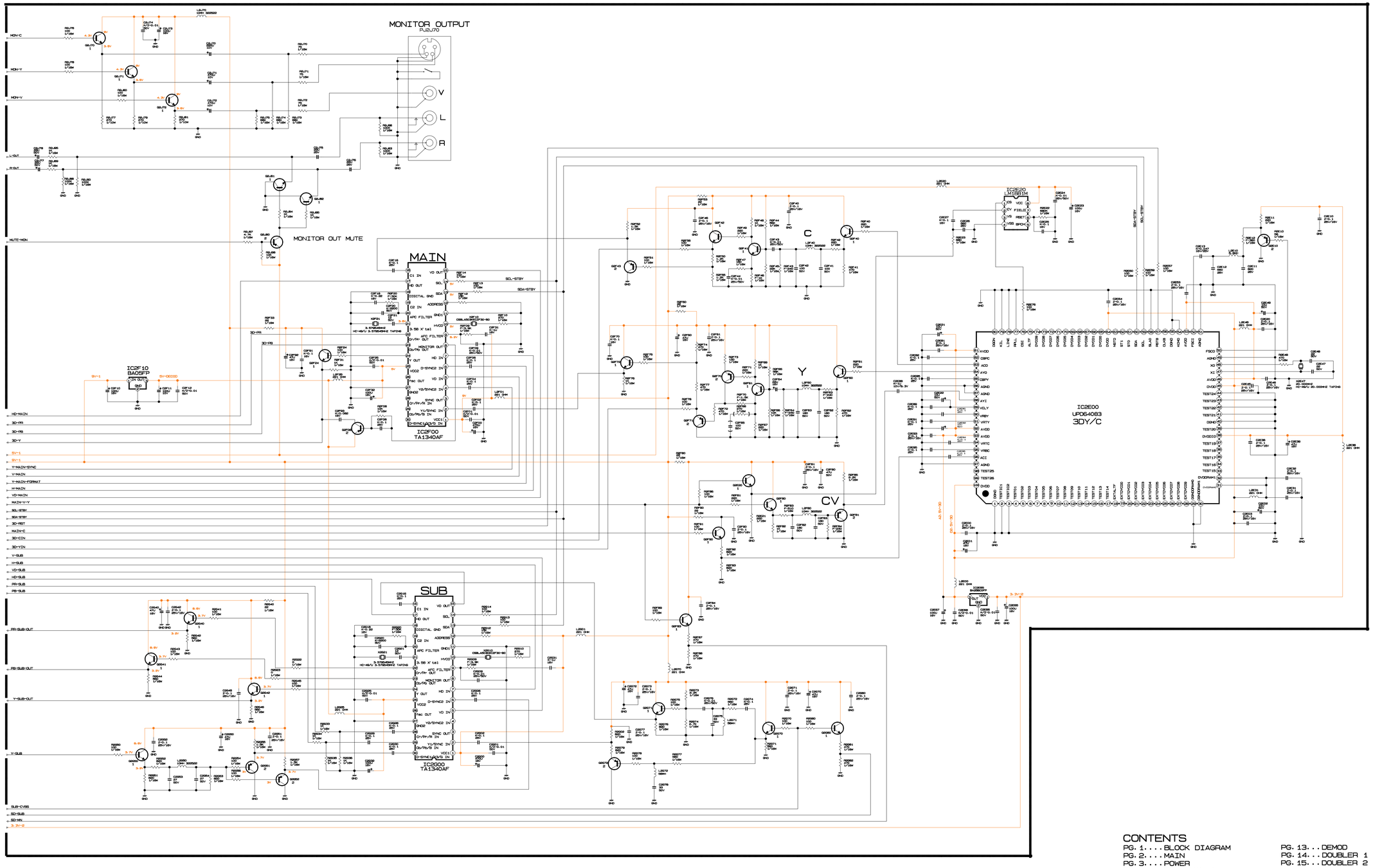

1 – 2SC2412K-R.S/2SD601AI-R.S
2 – 2SA1037K-R.S

CONTENTS

PG. 1....BLOCK DIAGRAM
PG. 2....MAIN
PG. 3....POWER
PG. 4....TERMINAL 1
PG. 5....TERMINAL 2
PG. 6....CRT/CONTROL/FRONT/PREAMP/SVM/DBF
PG. 7....M.LINK/E2P/DOUBLER 3
PG. 8....SIGNAL 1
PG. 9....SIGNAL 2
PG. 10...SIGNAL 3
PG. 11...SIGNAL 4
PG. 12...TUNER
PG. 13...DEMOD
PG. 14...DOUBLER 1
PG. 15...DOUBLER 2

WS-48513 WS-65613
WS-55513 WS-65713
WS-65513 WS-73713
WS-73513 WS-65813
WS-48613 WS-65813
WS-55613

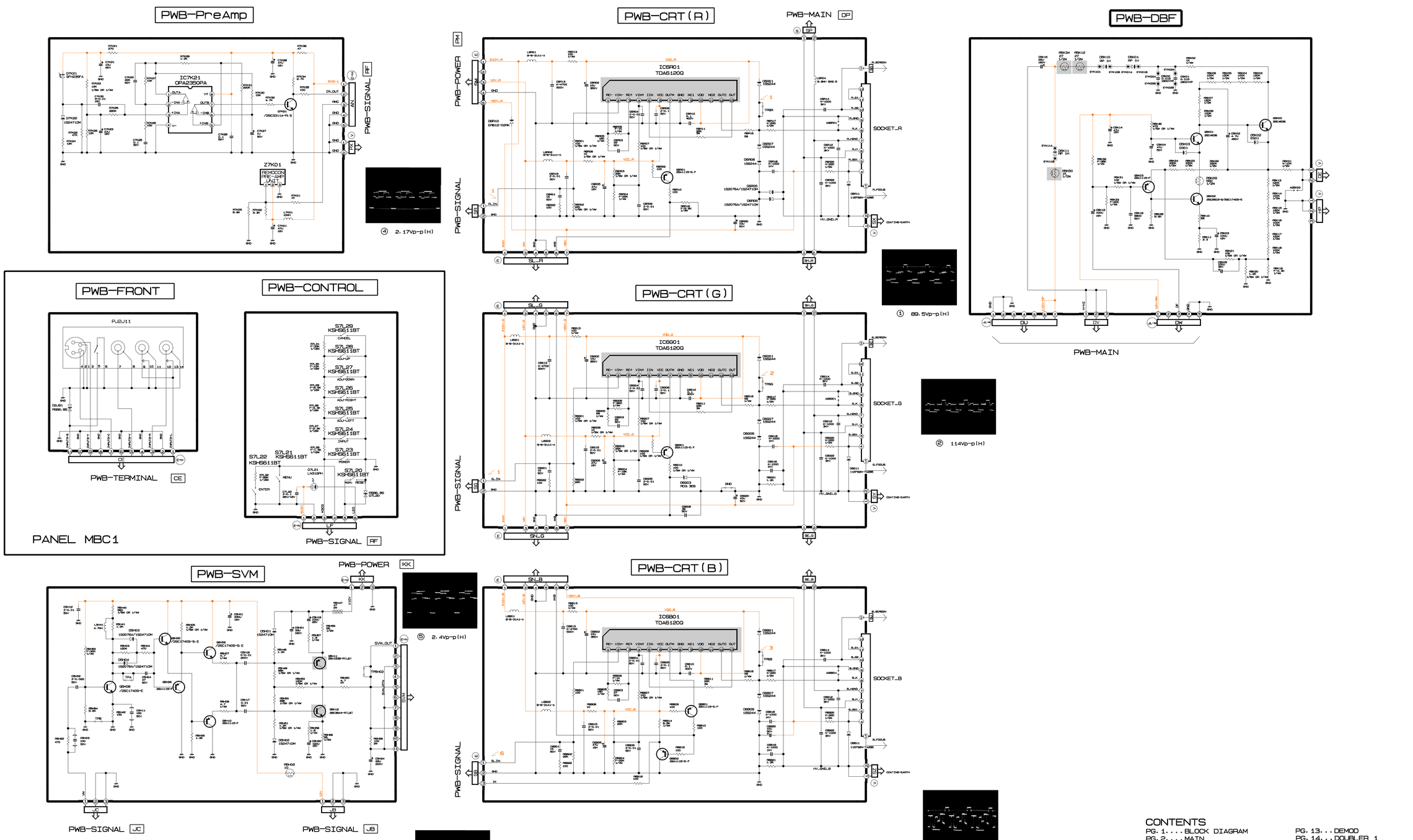

CONTENTS

PG. 1....BLOCK DIAGRAM		
PG. 2....MAIN		
PG. 3....POWER		
PG. 4....TERMINAL 1		
PG. 5....TERMINAL 2	WS-48513	WS-65613
PG. 6....CRT/CONTROL/FRONT/ PREAMP/SVM/DBF	WS-55513	WS-65713
	WS-65513	WS-73713
PG. 7....M.LINK/E2P/DOUBLER 3	WS-73513	WS-55813
PG. 8....SIGNAL 1		WS-65813
PG. 9....SIGNAL 2	WS-48613	
PG. 10...SIGNAL 3	WS-55613	
PG. 11...SIGNAL 4		
PG. 12...TUNER		
PG. 13...DEMOD		
PG. 14...DOUBLER 1		
PG. 15...DOUBLER 2		

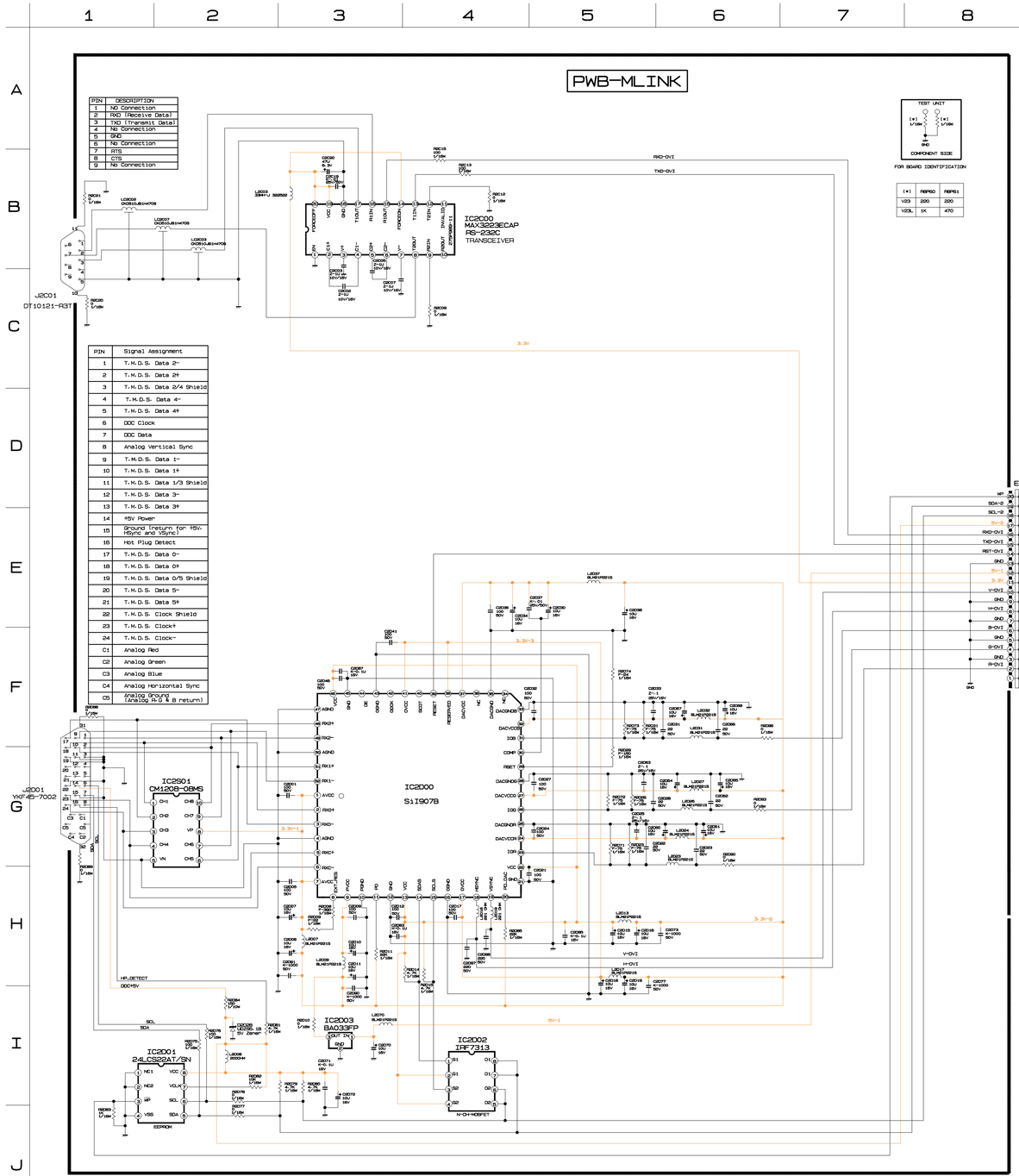

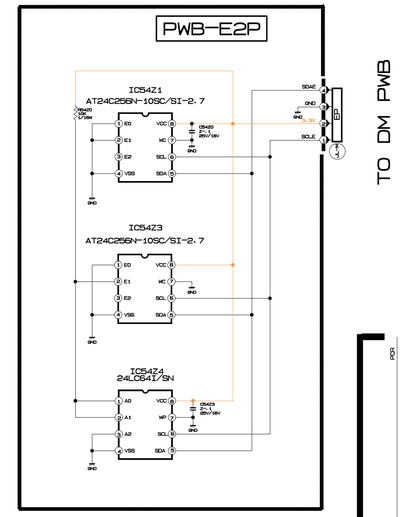

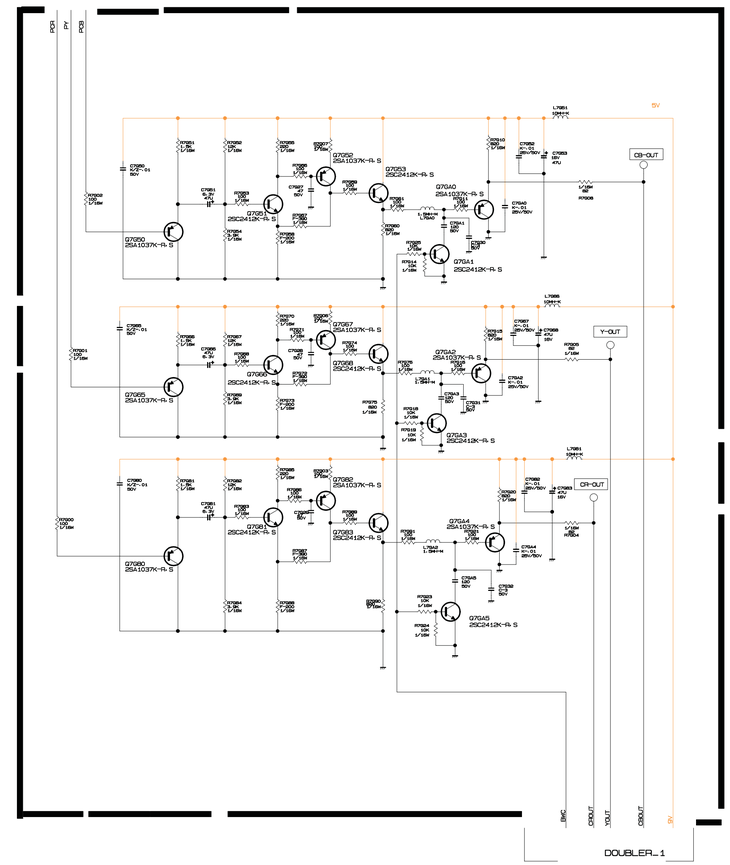

DOUBLER 3

CONTENTS

PG. 1. . . . BLOCK DIAGRAM
PG. 2. . . . MAIN
PG. 3. . . . POWER
PG. 4. . . . TERMINAL 1
PG. 5. . . . TERMINAL 2
PG. 6. . . . CRT/CONTROL/FRONT/ PREAMP/SVM/DBF
PG. 7. . . . M. LINK/E2P/DOUBLER 3
PG. 8. . . . SIGNAL 1
PG. 9. . . . SIGNAL 2
PG. 10. . . SIGNAL 3
PG. 11. . . SIGNAL 4
PG. 12. . . TUNER
PG. 13. . . DEMOD
PG. 14. . . DOUBLER 1
PG. 15. . . DOUBLER 2

WS-48513 WS-65613
WS-55513 WS-65713
WS-65513 WS-73713
WS-73513 WS-55813
WS-48613 WS-65813
WS-55613

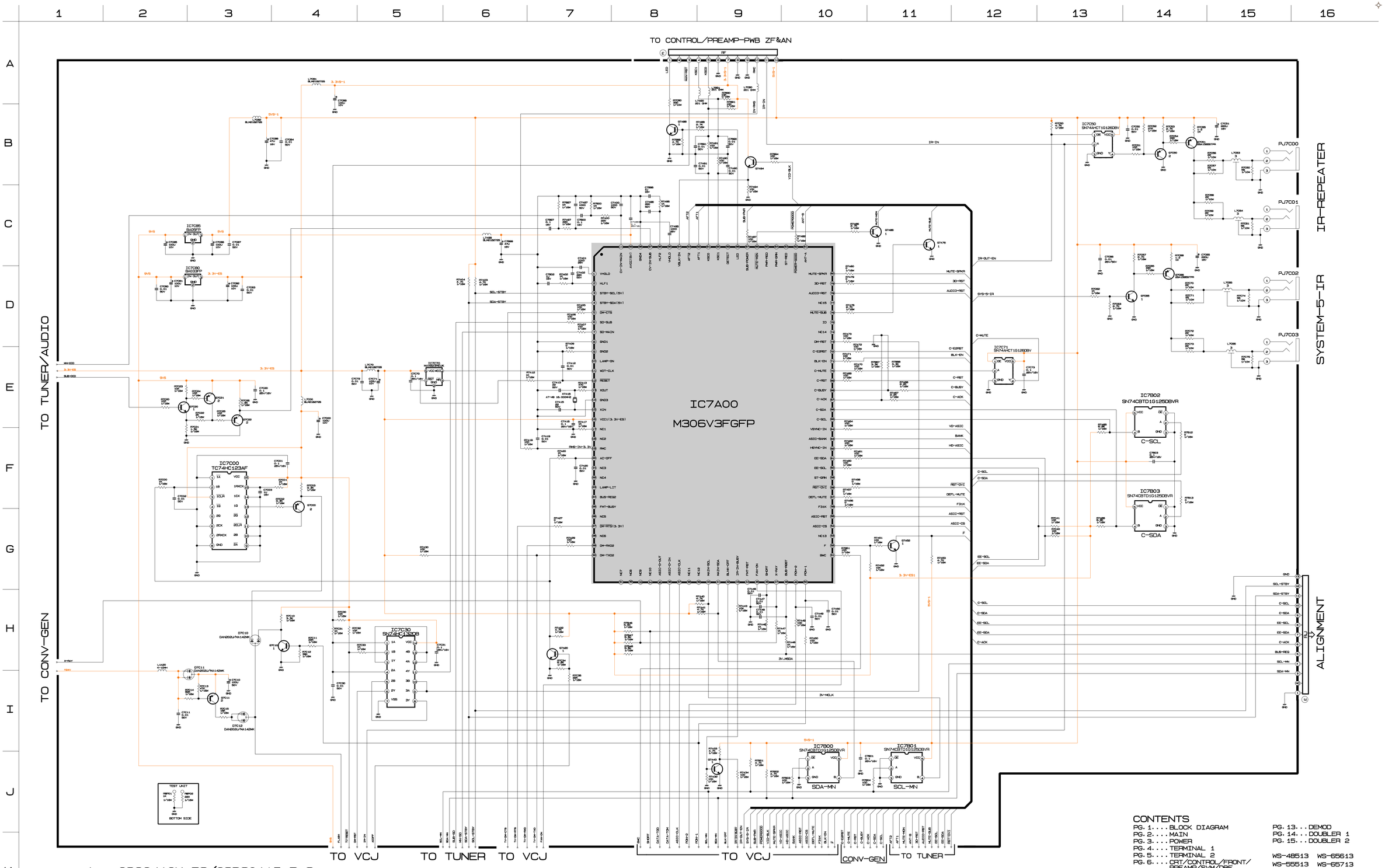

1 — 2SC2412K-RS/2SD601AI-R, S

2 — 2SA1037K-R, S/2SB709AI-R, S

3 — CNF20C221S/CKD510JBIH221S REFL

CONTENTS

PG. 1....BLOCK DIAGRAM
PG. 2....MAIN
PG. 3....POWER
PG. 4....TERMINAL 1
PG. 5....TERMINAL 2
PG. 6....CRT/CONTROL/FRONT/PREAMP/SVM/DBF
PG. 7....M-LINK/E2P/DOUBLER 3
PG. 8....SIGNAL 1
PG. 9....SIGNAL 2
PG. 10...SIGNAL 3
PG. 11...SIGNAL 4
PG. 12...TUNER
PG. 13...DEMOD
PG. 14...DOUBLER 1
PG. 15...DOUBLER 2

WS-48513 WS-65613
WS-55513 WS-65713
WS-65513 WS-73713
WS-73513 WS-55813
WS-48613 WS-65813
WS-55613

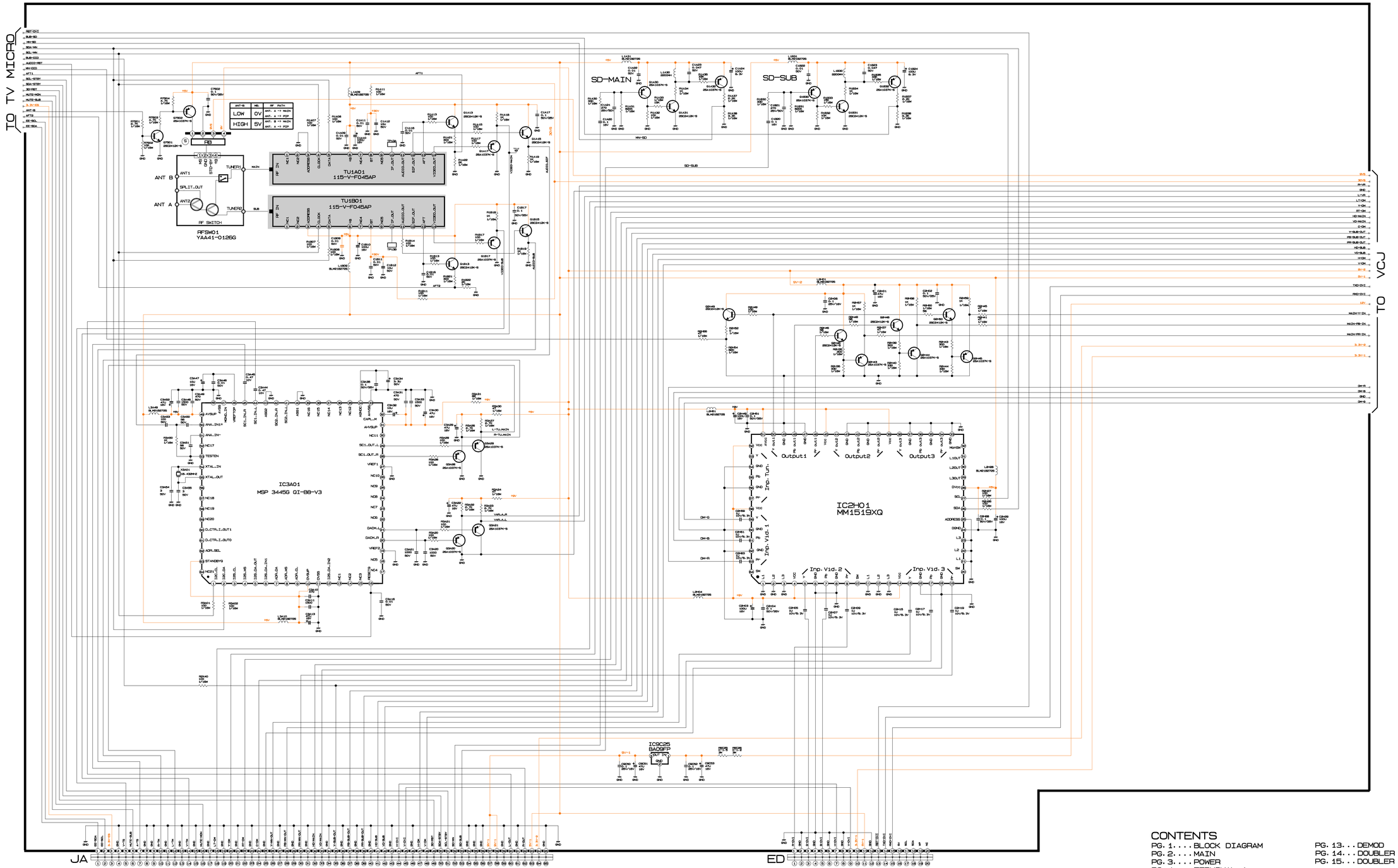

CONTENTS

PG. 1....BLOCK DIAGRAM
PG. 2....MAIN
PG. 3....POWER
PG. 4....TERMINAL 1
PG. 5....TERMINAL 2
PG. 6....CRT/CONTROL/FRONT/PREAMP/SVM/DBF
PG. 7....M. LINK/E2P/DOUBLER 3
PG. 8....SIGNAL 1
PG. 9....SIGNAL 2
PG. 10...SIGNAL 3
PG. 11...SIGNAL 4
PG. 12...TUNER
PG. 13...DEMOD
PG. 14...DOUBLER 1
PG. 15...DOUBLER 2

WS-48513 WS-55513 WS-65513 WS-73513 WS-48613 WS-55613 WS-65613 WS-65713 WS-73713 WS-55813 WS-65813

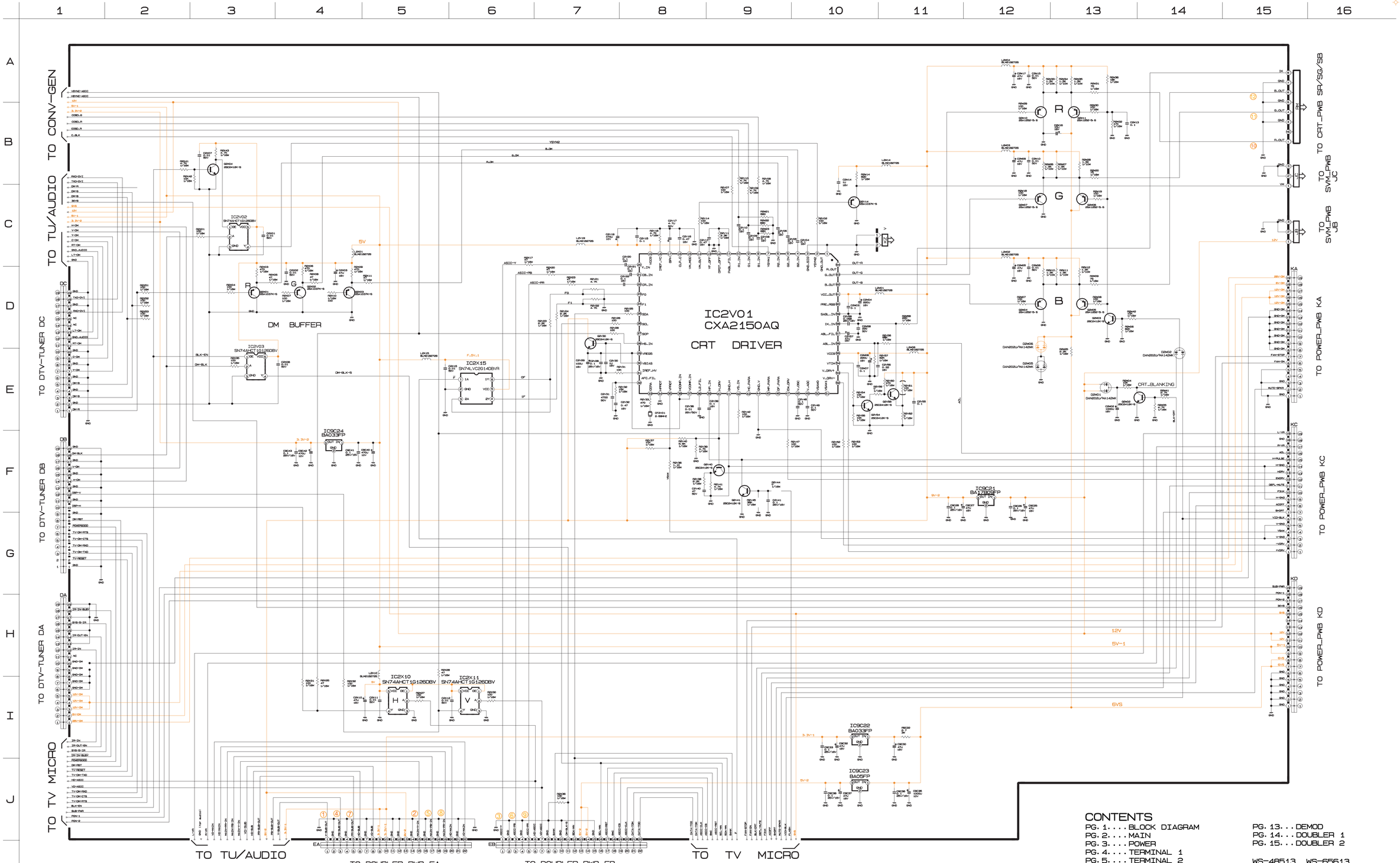

①②③ 2.1Vp-p (H)

④⑤⑥ 1.0Vp-p (H)

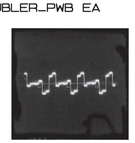

⑦⑧⑨ 0.7Vp-p (H)

⑩ 2.17Vp-p (H)

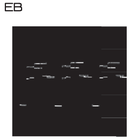

⑪ 2.4Vp-p (H)

⑫ 1.6Vp-p (H)

CONTENTS

PG. 1. . . . BLOCK DIAGRAM
PG. 2. . . . MAIN
PG. 3. . . . POWER
PG. 4. . . . TERMINAL 1
PG. 5. . . . TERMINAL 2
PG. 6. . . . CRT/CONTROL/FRONT/ PREAMP/SVM/DBF
PG. 7. . . . M. LINK/E2P/DOULBER 3
PG. 8. . . . SIGNAL 1
PG. 9. . . . SIGNAL 2
PG. 10. . . SIGNAL 3
PG. 11. . . SIGNAL 4
PG. 12. . . TUNER
PG. 13. . . DEMOD
PG. 14. . . DOULBER 1
PG. 15. . . DOULBER 2

WS-48513 WS-65613
WS-55513 WS-65713
WS-65513 WS-73713
WS-73513 WS-55813
WS-48613 WS-65813
WS-55613

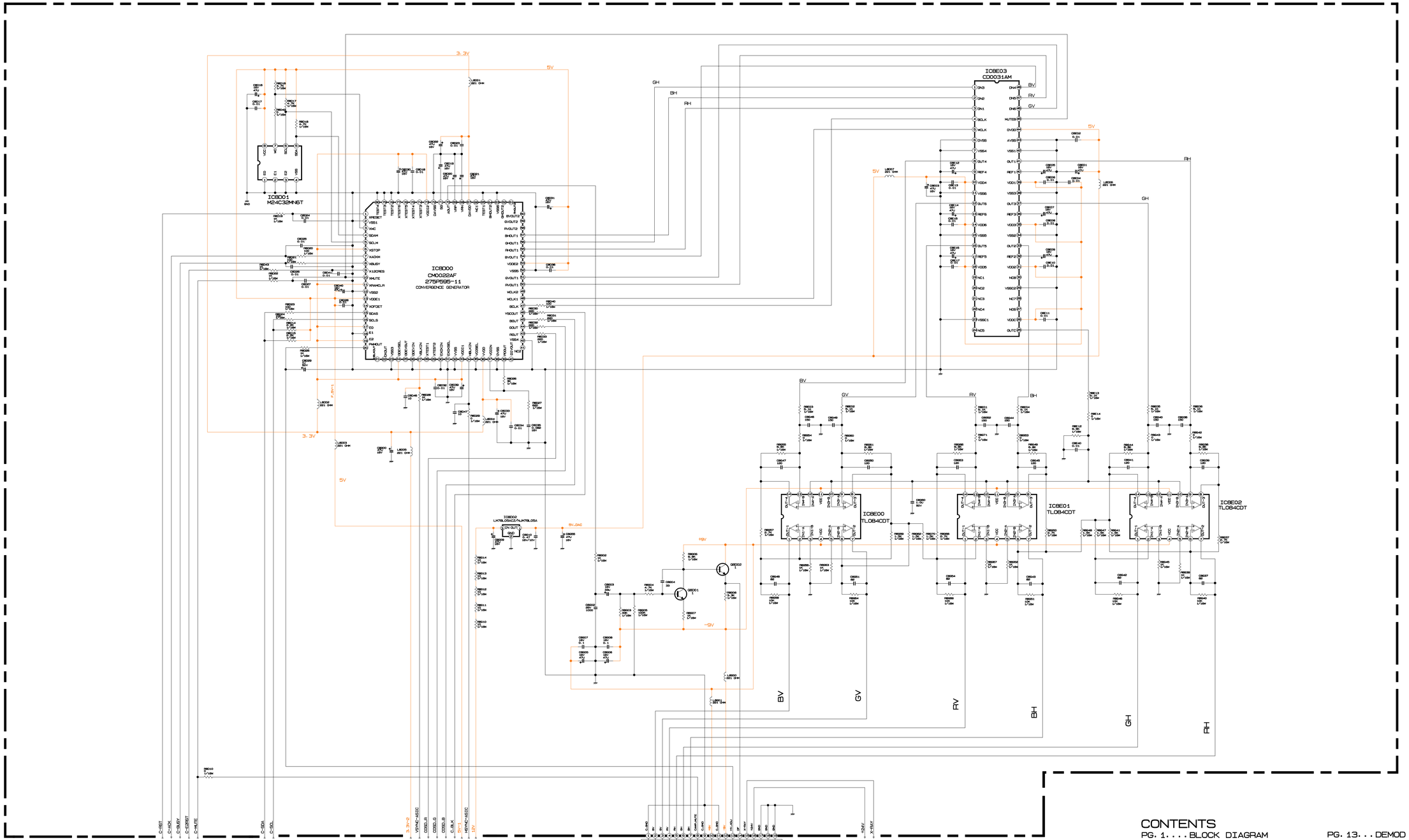

1- 2SC2412K-R, S/2SD601AI-RS

CONTENTS

PG. 1....BLOCK DIAGRAM
PG. 2....MAIN
PG. 3....POWER
PG. 4....TERMINAL 1
PG. 5....TERMINAL 2
PG. 6....CRT/CONTROL/FRONT/ PREAMP/SVM/DBF
PG. 7....M. LINK/E2P/DOUBLER 3
PG. 8....SIGNAL 1
PG. 9....SIGNAL 2
PG. 10...SIGNAL 3
PG. 11...SIGNAL 4
PG. 12...TUNER
PG. 13...DEMOD
PG. 14...DOUBLER 1
PG. 15...DOUBLER 2

WS-48513 WS-65613
WS-55513 WS-65713
WS-65513 WS-73713
WS-73513 WS-55813
WS-48613 WS-65813
WS-55613

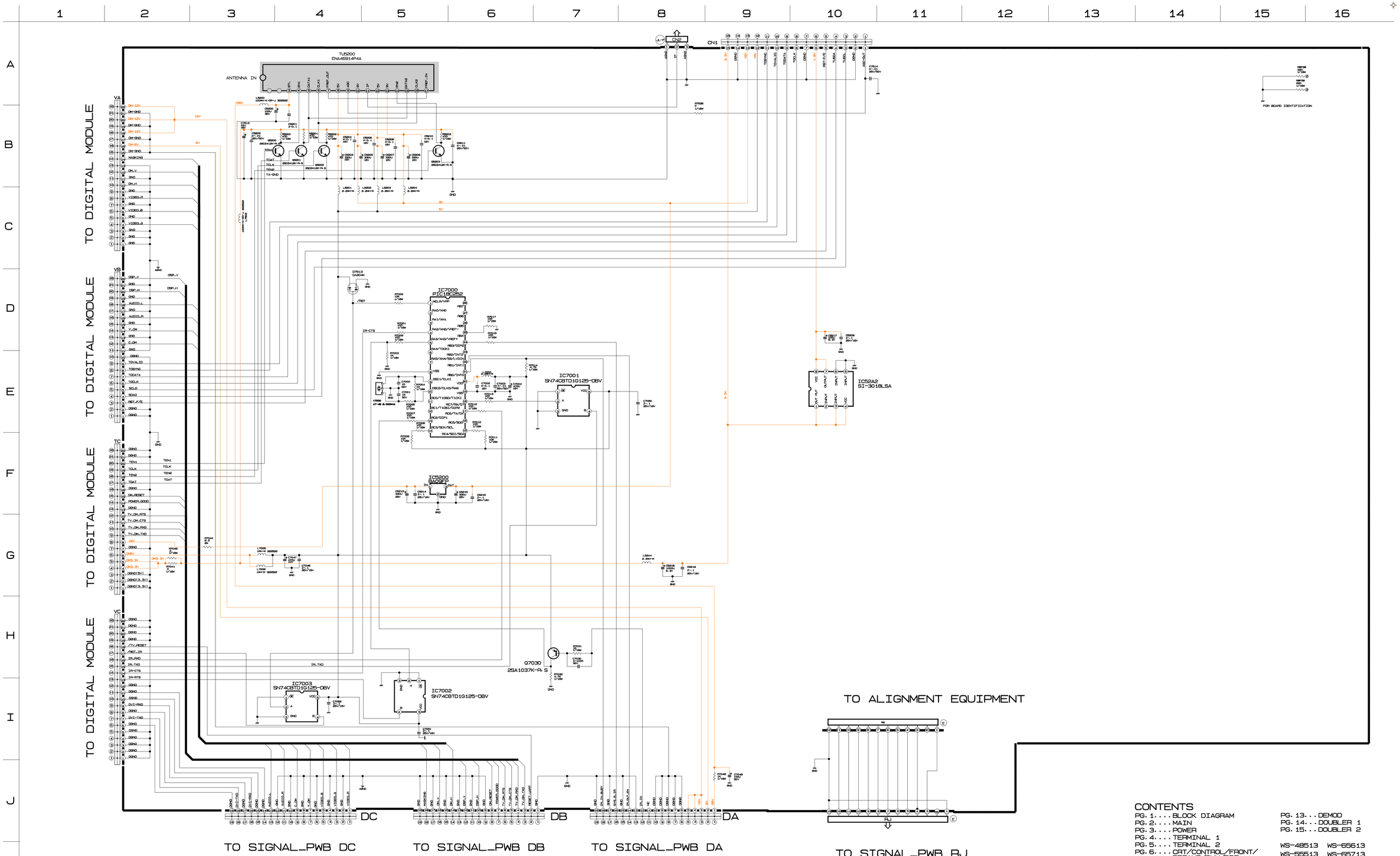

CONTENTS

PG. 1....BLOCK DIAGRAM
PG. 2....MAIN
PG. 3....POWER
PG. 4....TERMINAL 1
PG. 5....TERMINAL 2
PG. 6....CRT/CONTROL/FRONT/PREAMP/SVM/DBF
PG. 7....M-LINK/E2P/DOUBLER 3
PG. 8....SIGNAL 1
PG. 9....SIGNAL 2
PG. 10...SIGNAL 3
PG. 11...SIGNAL 4
PG. 12...TUNER
PG. 13...DEMOD
PG. 14...DOUBLER 1
PG. 15...DOUBLER 2

WS-48513 WS-65613
WS-55513 WS-65713
WS-65513 WS-73713
WS-73513 WS-55813
WS-48613 WS-65813
WS-55613

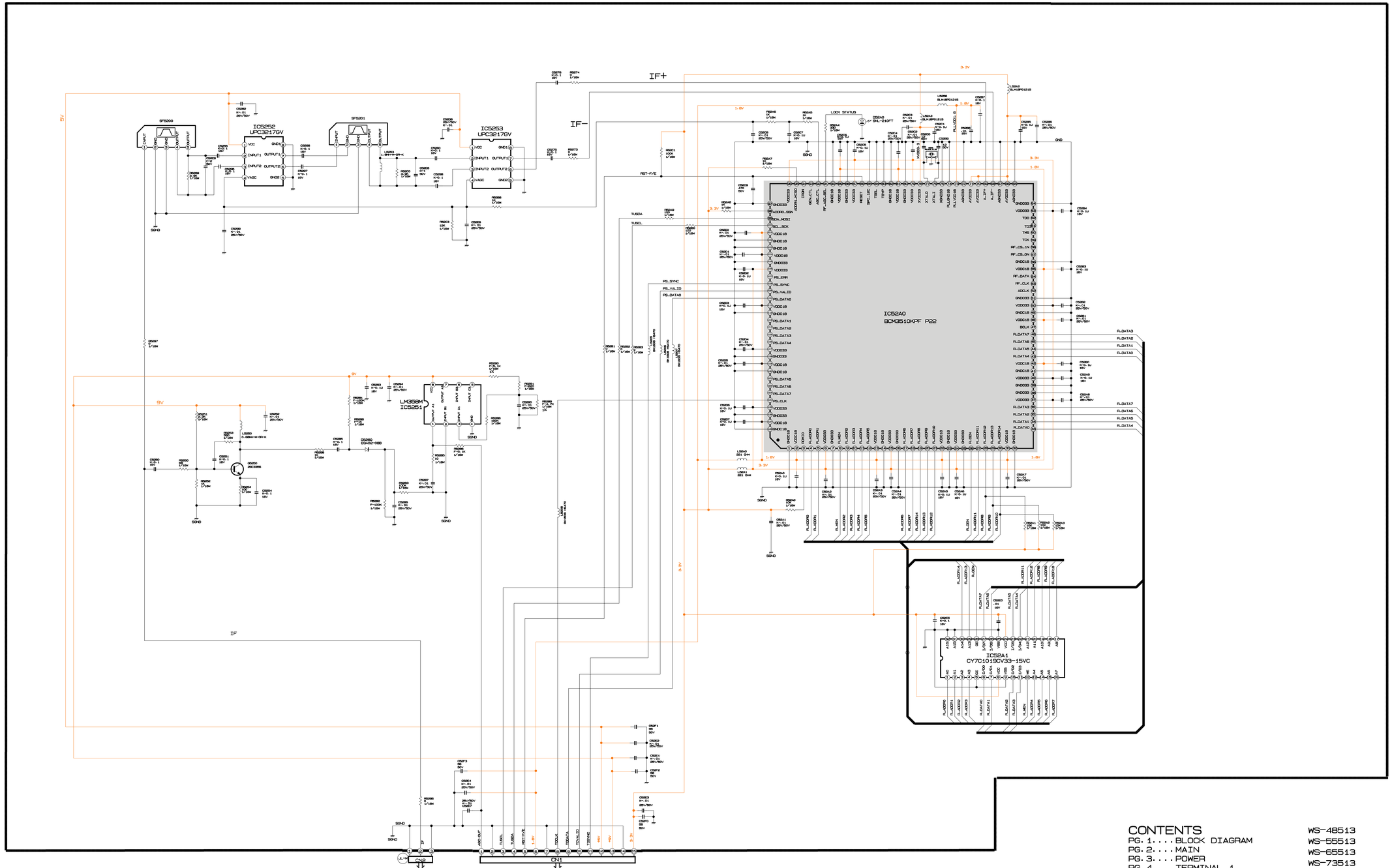

CONTENTS

PG. 1. . . . BLOCK DIAGRAM	WS-48513
PG. 2. . . . MAIN	WS-55513
PG. 3. . . . POWER	WS-65513
PG. 4. . . . TERMINAL 1	WS-73513
PG. 5. . . . TERMINAL 2	WS-48613
PG. 6. . . . CRT/CONTROL/FRONT/ PREAMP/SVM/DBF	WS-55613
	WS-65613
PG. 7. . . . M. LINK/E2P	WS-65713
PG. 8. . . . SIGNAL 1	WS-73713
PG. 9. . . . SIGNAL 2	WS-55813
PG. 10. . . SIGNAL 3	WS-65813
PG. 11. . . SIGNAL 4	
PG. 12. . . TUNER	
PG. 13. . . DEMOD	

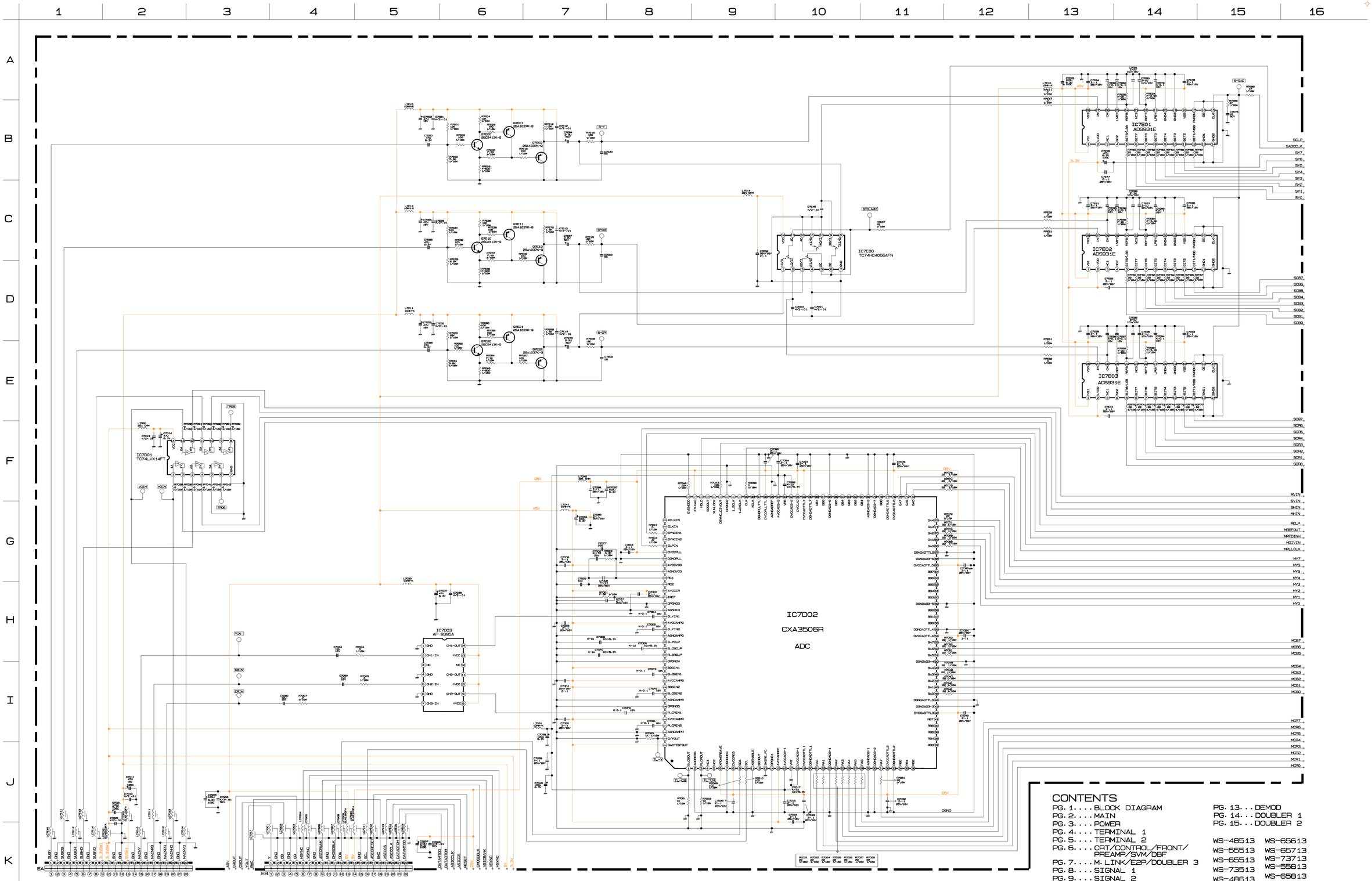

CONTENTS

PG. 1. . . . BLOCK DIAGRAM
PG. 2. . . . MAIN
PG. 3. . . . POWER
PG. 4. . . . TERMINAL 1
PG. 5. . . . TERMINAL 2
PG. 6. . . . CRT/CONTROL/FRONT/ PREAMP/SVM/DBF
PG. 7. . . . M. LINK/E2P/DOUBLER 3
PG. 8. . . . SIGNAL 1
PG. 9. . . . SIGNAL 2
PG. 10. . . SIGNAL 3
PG. 11. . . SIGNAL 4
PG. 12. . . TUNER
PG. 13. . . DEMOD
PG. 14. . . DOUBLER 1
PG. 15. . . DOUBLER 2

WS-48513	WS-65613
WS-55513	WS-65713
WS-65513	WS-73713
WS-73513	WS-55813
WS-48613	WS-65813
WS-55613	

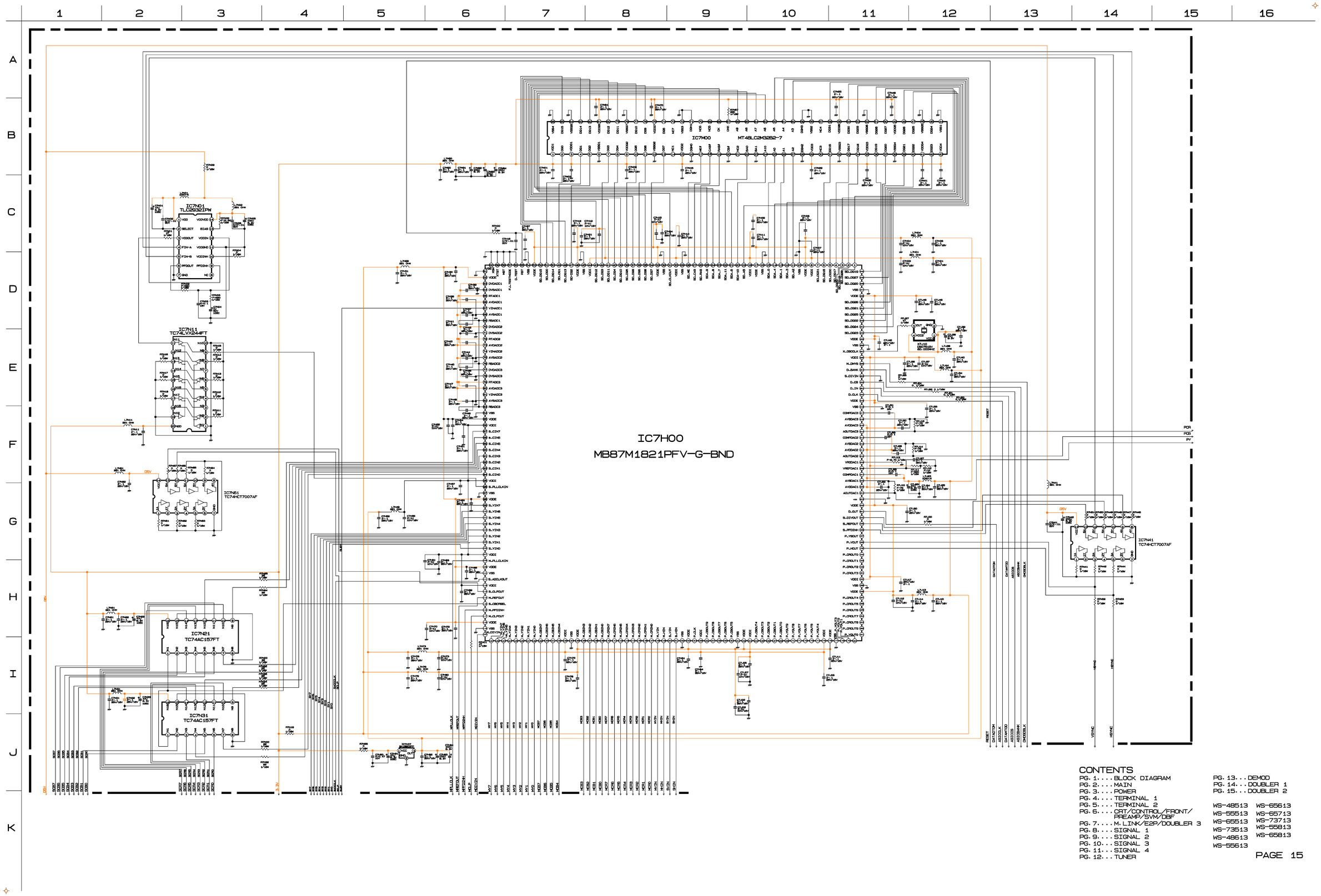

CONTENTS

PG. 1....BLOCK DIAGRAM
PG. 2....MAIN
PG. 3....POWER
PG. 4....TERMINAL 1
PG. 5....TERMINAL 2
PG. 6....CRT/CONTROL/FRONT/PREAMP/SVM/DBF
PG. 7....M. LINK/E2P/DOUBLER 3
PG. 8....SIGNAL 1
PG. 9....SIGNAL 2
PG. 10...SIGNAL 3
PG. 11...SIGNAL 4
PG. 12...TUNER
PG. 13...DEMOD
PG. 14...DOUBLER 1
PG. 15...DOUBLER 2

WS-48513	WS-65613
WS-55513	WS-65713
WS-65513	WS-73713
WS-73513	WS-55813
WS-48613	WS-65813
WS-55613	